LONGBOARD®
INSPIRING ARCHITECTURE

Tongue and Groove Cladding

Installation Guidelines

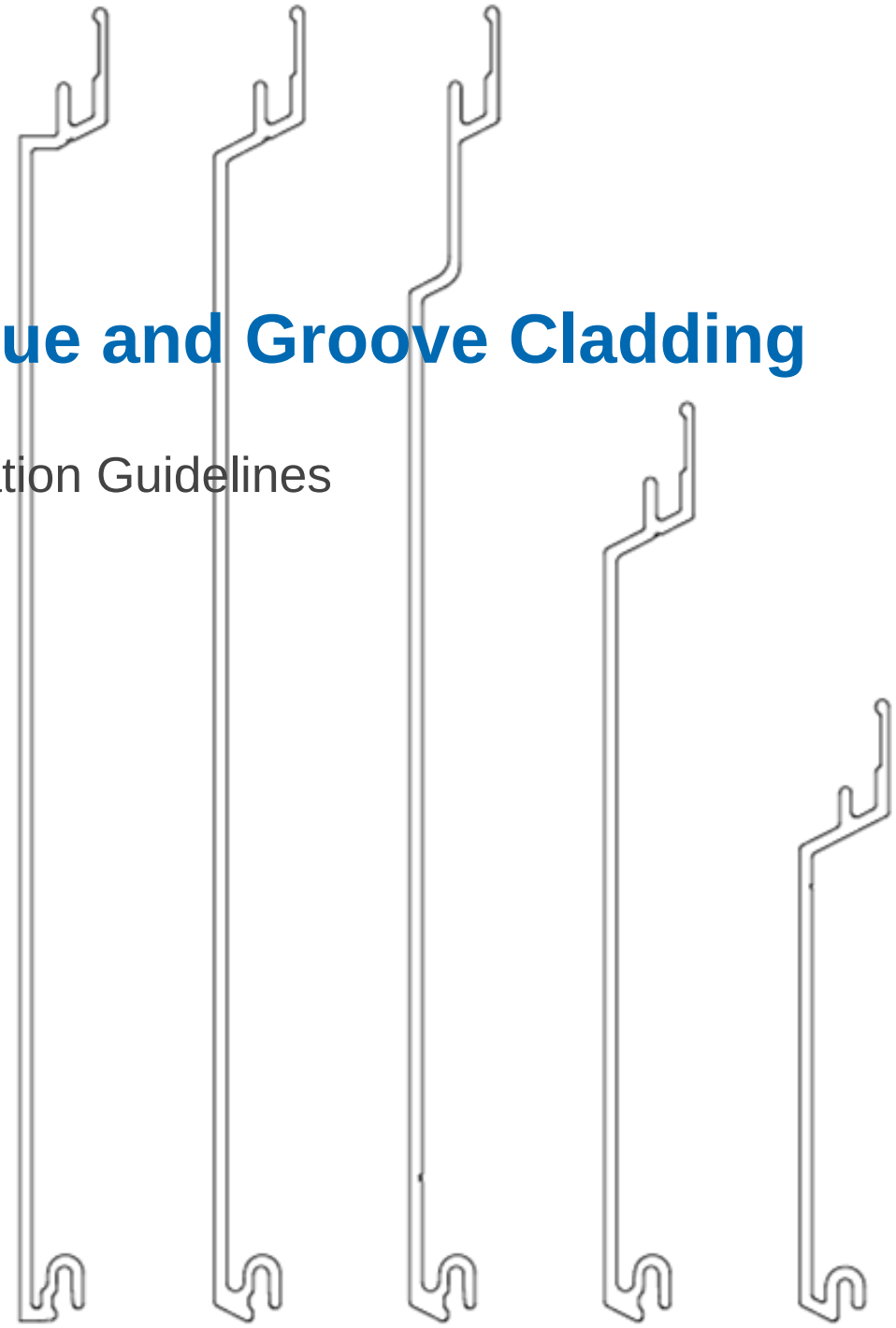

Table of Contents

Material Specifications 3
- Finishes 3
- Material ordering and deliveries 3
- Storage and handling 3
- Cleaning Recommendations 3
- Warranty 3
- Graffiti Removal 4

Components 5
- Components (Typical) 5

Tools/Cutting/Fastening 6
- Tools 6
- Cutting 6
- Fastening/Fastener types 7
- Framing/Furring requirements 7
- Fastening options onto exterior insulation 8
- Fastening options for Drip Edge condition 8

Expansion and Contraction 9

System Install 10
- Perimeter area and field limitations 10
- Component layout 11
  - Corners 11
  - J-Track, Two-piece J-Track 11
  - Starter Strip, Back-to Back Starter 11
  - Reveal Sets 11
  - Compression Joint 11
  - Termination Set 11
  - Offset Flat Reveal 11
- Install Steps 12
  - Horizontal Cladding 12-16
  - Vertical Cladding 17-21
  - Final Steps 22
- Details 23
  - Single Butt-Joints 23-24
  - Multiple Floating Butt-Joints 25
  - Floor elevations Compression Joint 26
  - Floor elevations Through wall flashing 26
  - Expansion reveals 27

Appendix 28
- Tables 1&2 - Expansion & contraction 28
- Tables 3 – Fastening to Structure 29
- Tables 4-6 – Fastening to Sheathing 30-32
- Radius Table 33
- Handling and care of products 34
- Blank Page 35
- Contact Info 36

Material Specifications

Finishes

- Longboard Products are available in a wide range of powder coated finishes.
- Custom solid colors are available upon request.
- Longboard woodgrains have a repeat pattern, shipped in sets mated back-to-back in each box. Install these as they come out of the box, as an A&B pattern staggering each plank approx. 1-2' (305-610mm) from the previous plank to achieve a random pattern aesthetic. It is recommended to create an onsite mock-up to produce a suitable pattern.
- Longboard Products are not recommended for use on marine applications in direct contact with salt water.

Longboard extruded products are produced 1" (25mm) oversized, as one end is drilled for the coating process, and both ends have 1/2" (12mm) of masking tape (woodgrains only) which must be cut off for best results. Longboard Cladding is to be installed outboard of a weather resistant barrier, including all flashings, following code, and building requirements.

Material Ordering & Delivery

• Packaging:	Planks are sold in box quantities: 6" Planks: 96 SQ FT/Box (8/24's, 192 LF) w. 90pcs Quick-Screen Clips included 4" V-Groove: 96 SQ FT/Box (12/24's, 288 LF) w. 144 Quick-Screen Clips included 2 1/2" V-Groove: 20 SQ FT/Box (8/12's, 96 LF) w. 45 Quick-Screen Clips included Trim Components are sold individually by the 12' (3.7m) length.
• Shipping:	Most Popular Finishes -ready to ship within 1 week Additional Finishes -ready to ship within 14 weeks Delivered on 24' (7.3m) long skids weighing up to 2000 lbs. A mechanical lift with forks is required on site to receive the order.
• QC:	Always inspect the delivery for damage and contact LB ASAP if there are any issues: info@longboardproducts.com or 1-800-604-0343 and include your PO# and any pictures if possible. Mark the delivery receipt as "damaged" and accept the delivery as-is. Longboard is not responsible for the installation of blemished or damaged material.

Storage & Handling

Be sure to store the material flat, keep it dry, safe & secure and remain in unopened cartons until ready to be installed. **See Appendix for proper handling and care instructions.**

Cleaning Recommendations

- Initial and periodic cleaning for best looking product
- Basic methods use a combination of moderate water pressure, soft sponge/brush and a mild detergent (Safe for your hands, safe for the product)

⚠ NEVER use aggressive acid or alkaline cleaners on Longboard finishes. Do not use cleaners containing Trisodium Phosphate, Phosphoric Acid, Hydrochloric Acid, Hydrofluoric Acid, Fluorides, or any other compound that is known to react with metal.

See Cleaning Guide for full requirements & cleaning schedule:
longboardproducts/resources/care-maintenance.com

Warranty

Upon substantial completion of the project, register for warranty online here: longboardproducts.com/warranty

⚠ Registration is required for the warranty to be in effect.

Graffiti Removal

Standard Woodgrain

Use Standard soap & water only

D2000 Solid Color

	Prosoco Cleaner	MEK Solvent
Permanent Marker	✓	✓
Oil Based Spray Paint	✓	✓
Water Based Spray Paint	✓	✓
Adhesive Tape	✓	✓

MEK Solvent

Prosoco Anti-Graffiti Cleaner

SPECIAL ORDER - EXT. LEAD TIMES CONTACT LB

Anti-Graffiti High Gloss Woodgrain

	MEK Solvent
Permanent Marker	✓
Oil Based Spray Paint	✓
Water Based Spray Paint	✓
Adhesive Tape	✓

MEK Solvent

Note: Cleaning the surface with a cleanser that is not diluted as per instructions, may result in damage to the coating.

Components

Components (Typical)

T&G Cladding system consists of many components used in conjunction with each other to create a seamless look. For all LB components go to longboardproducts.com.

V-Groove Planks

* 48 sq. ft. box quantities ‡ 96 sq. ft. box quantities

Size	12' *	24' ‡	12' Perf *	24' Perf ‡
2½"	3V.145	-	3VP.145	-
4"	4V.145	4V.289	-	-
6"	6V.145	6V.289	6VP.145	6VP.289

Butt-Joint Fastening Kit

Smooth Planks

Size	12' *	24' ‡	12' Perf *	24' Perf ‡
6"	6PSP.145	6PSP.289	6PSPP.145	6PSPP.289

Quick-Screen Clip

Channel Planks

Size	12' *	24' ‡
6"	6CH.145	6CH.289

Accessories

Product	Qty	SKU
Quick Screen Clips	1750, box	CLIP.N1750
Quick Screen Clips	100, bag	CLIP.N100
1/16" U-SHIM	250, bag	SHIM.1001
Butt- Joint Fastening Kit (6")	20 kits, bag	TGBJKIT
Touch Up Pens *Reach out to confirm color with account manager.*	N/A	TUP

Trim Components

Type	Style	Product	Dimensions	SKU
Starter	Precision	Starter J-Track	(5/8") - 12'	1SJT.145
Starter	Traditional	Starter Strip	(1-7/8") - 12'	2SS.145
Starter	Traditional	Back-to-Back Starter Strip	(1-1/4")	2BTBSS.145
J-Track	Precision	Two Piece J-Track	(5/8") - 12'	1X1JT.145
J-Track	Precision	J-Track	(5/8") - 12'	1JT.145
J-Track	Craftsman	J-Track	(7/8") - 12'	JT23.145
J-Track	Craftsman	Two Piece J-Track	(7/8") - 12'	JT23S.145
J-Track	Traditional	Two Piece J-Track	(1-3/8") - 12'	1X2JT.145
Corner	Precision	Outside Corner	(3/16") - 12'	05OC.145
Corner	Craftsman	Inside Corner	(3/4") - 12'	1IC.145
Corner	Craftsman	Outside Corner	(1") - 12'	1OC.145
Corner	Traditional	Corner Set	(2") - 12'	2CORS.145
Corner	Traditional	3" Smooth	(3") - 24'	3SCP.289
Corner	Traditional	3" V-Groove	(3") - 24'	3SVP.289
Reveal	Precision	Flat Reveal	(1/2") - 12'	1FR.145
Reveal	Precision	T&G Flat Reveal	(1/2") - 24'	1TGFR.289
Reveal	Craftsman	U-Reveal Set	(3/4") - 12'	1URS.145
Reveal	Craftsman	T&G U-Reveal	(3/4) - 24'	1TGURK.289
Reveal	Traditional	U-Reveal Set	(1-1/2") - 12'	2URS.145
Reveal	Traditional	Flat Reveal Set	(1-1/2") - 12'	2FRS.145
Reveal	Traditional	T&G U-Reveal	(1 1/2") - 24'	2TGURK.289
Reveal	Traditional	Offset Flat Reveal Set, J-Track Base	(2") - 12'	2OFFJ.145
Reveal	Traditional	Offset Flat Reveal Set, Termination Base	(2") - 12'	2OFFT.145
Termination	Precision	Termination Set	(5/8") - 12'	1TS.145
Termination	Craftsman	Termination Set	(7/8") - 12'	TS23S.145
Termination	Traditional	Termination Set	(1-3/8") - 12'	2TS.145
Compression Joints	Traditional	Compression Joint	(1-3/8") - 24'	2CJ.289

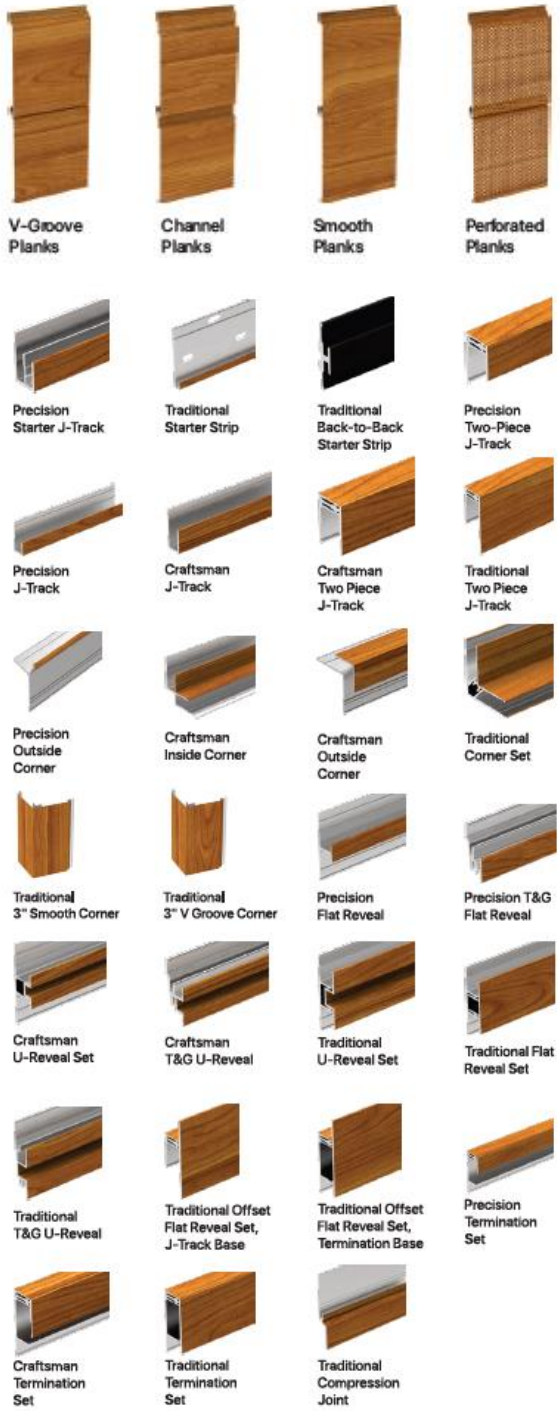

Tools/Cutting/Fastening

Tools

Commonly used tools for T&G Cladding install.

	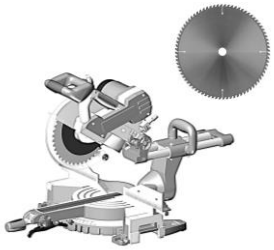		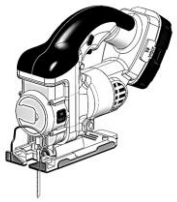
Table Saw with Carbide Metal Blade Non-ferrous 60-80T (for cutting aluminum)	Miter Saw with Carbide Metal Blade Non-ferrous 60-80T (for cutting aluminum)	Cordless Drill with clutch	Jig Saw (for protrusions)
	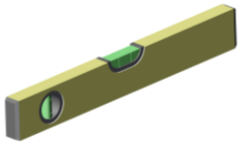		*Length, thread and point to suit substrate
Rubber Mallet (or Hammer)	Level	Hole Saw (for lighting fixtures)	#10 Pan Head Screws (by others)

Cutting

⚠ Always be sure to wear appropriate PPE: eye & hearing protection.

Cut planks using a Miter Saw and Table Saw, always allowing for expansion & contraction. Trim the taped/drilled ends of all stock length material by at least **1/2“ (12mm) each end** and discard.

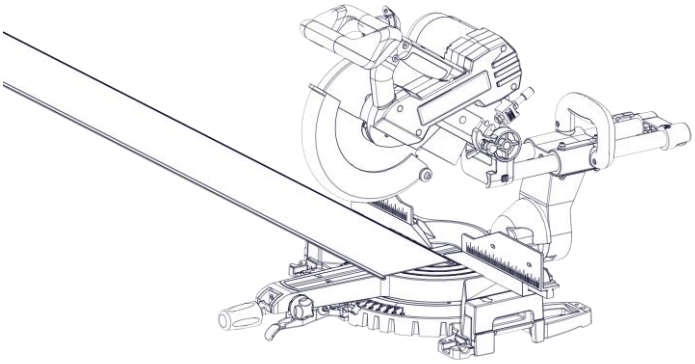

⚠ DO NOT Install Planks or Trims without trimming the ends.

Fastening

⚠ Always consult the project engineer, architect or authority having jurisdiction to understand the project specific fastening requirements.

Typical spacing:
-using **#10 Fasteners** (by others)

Trim components including Starter Strip

- **16" (406mm) O.C.**

Planks
Standard wind loads

- **32" (813mm) O.C.**
  (Quick-Screen Clips included with order for this spacing)

Higher wind loads

- **16" (406mm) O.C.**
  (Add extra Quick-Screen Clips to order)

See **Appendix for fastening specs:**
Fastening to Structure -Table 3
Fastening to Sheathing Tables 4-6

Fastener types

RECOMMENDED **CORRECT**

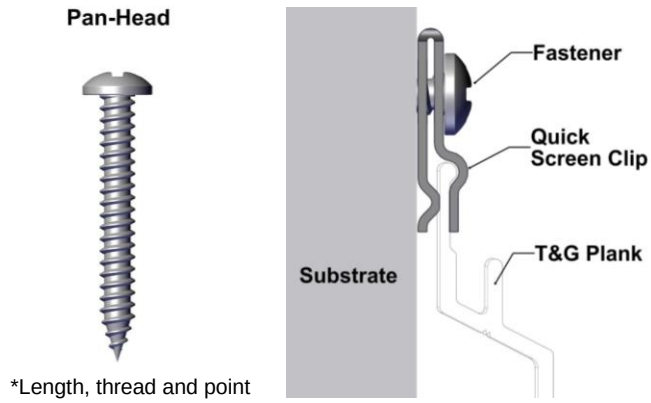

*Length, thread and point to suit substrate

DO NOT USE **INCORRECT**

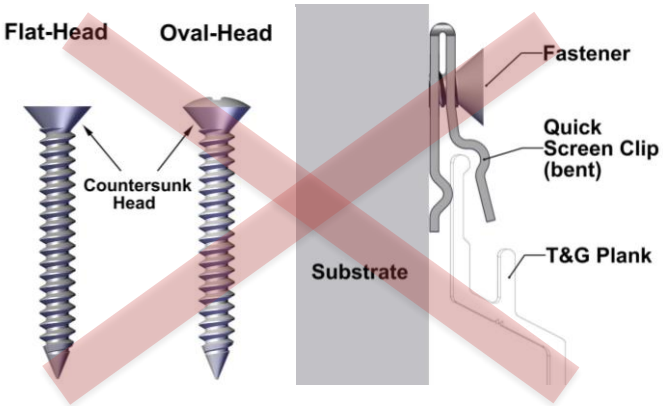

Framing/Furring requirements

Always consult the local building authority and follow local building code requirements.
When attaching to **Hitch Cladding attachment System** refer to Hitch Install Guide for requirements.
See **Appendix for framing/furring/sheathing specs: Tables 3-6**

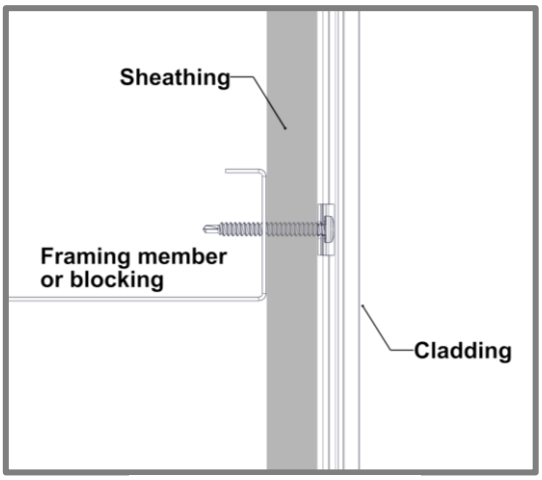

Fastening to Structure
(see Table 3 for specs)

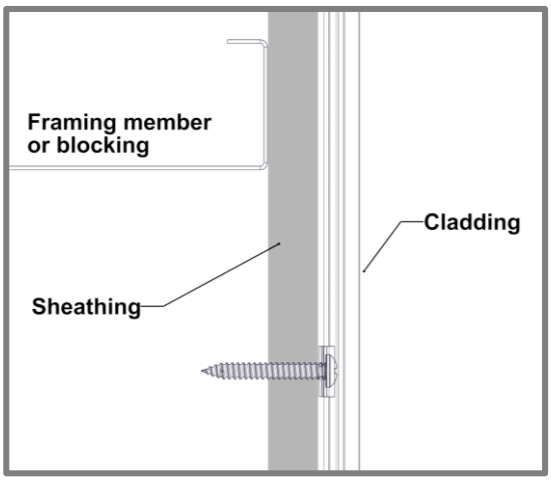

Fastening to Sheathing
(see Tables 4-6 for specs)

Fastening options onto exterior insulation or existing materials

*Never direct to insulation. Must be secured directly to solid secure substrate.

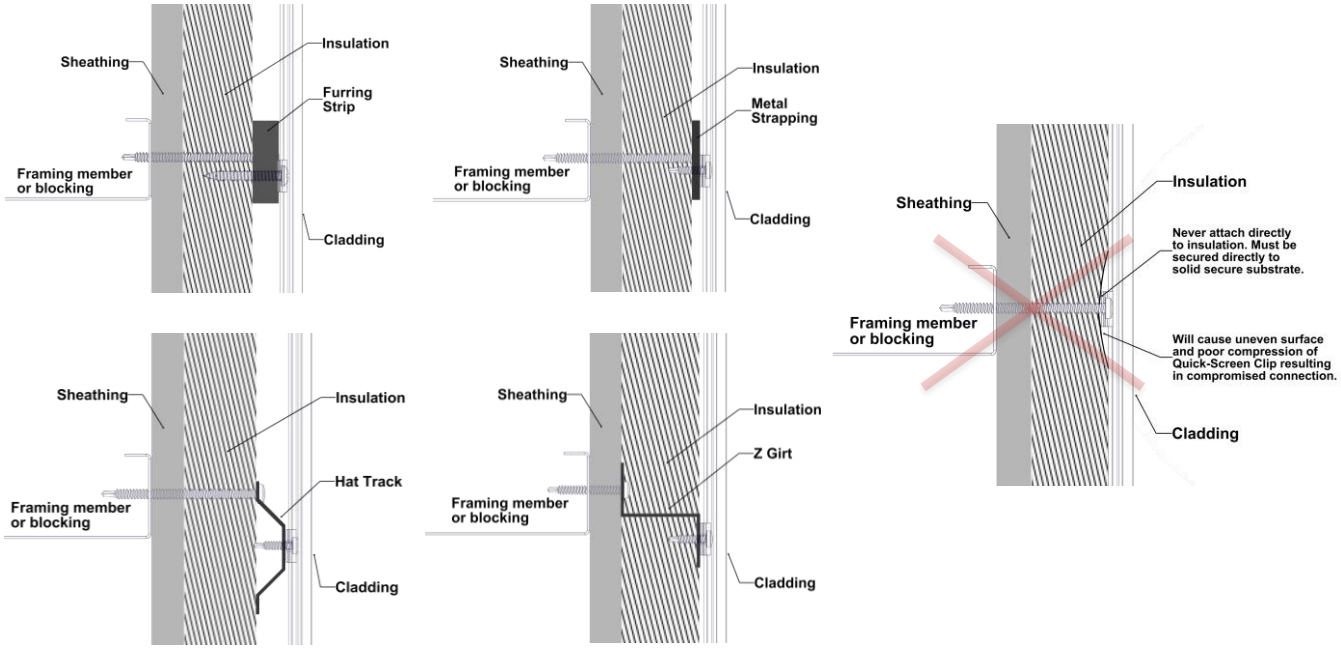

Fastening option for Drip Edge condition

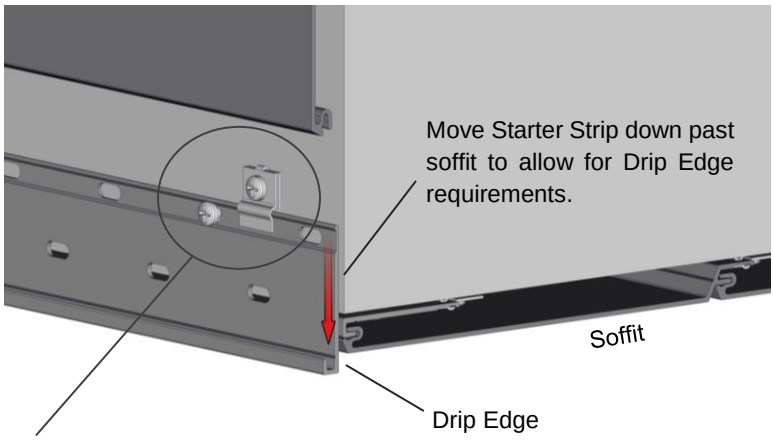

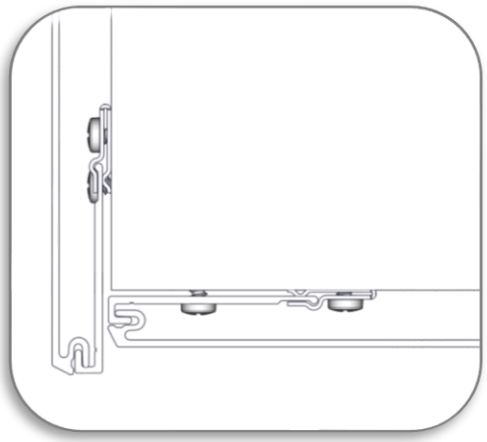

Note: For Drip Edge condition, Starter Strip requires two anchors at each fastener location (One with Quick Screen Clip and one at top-point sotted hole)

Expansion & Contraction

While selecting component and layout options, the project design team needs to calculate their expansion and contraction amounts. **See: Appendix for tables of expansion/contraction calculations per foot/meter.** Planks & components expand & contract 1/4” (6mm) over 24’ (7.3m), measured over a 30℃ (54℉) temperature range. Due to this range of movement, the following expansion components should be installed. See pages 26 & 27.

Horizontal Install

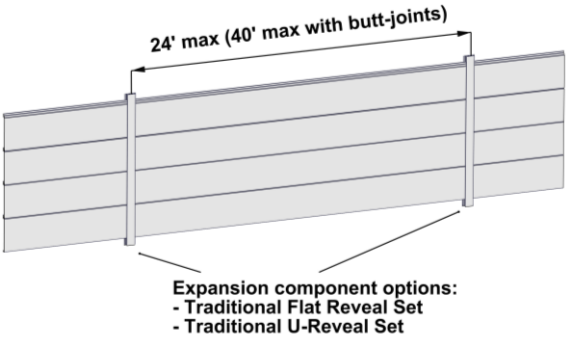

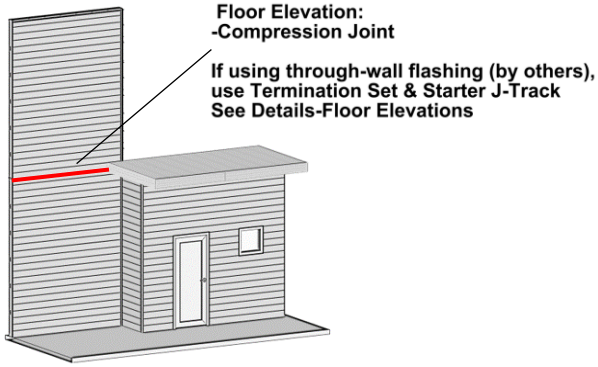

Vertical Install

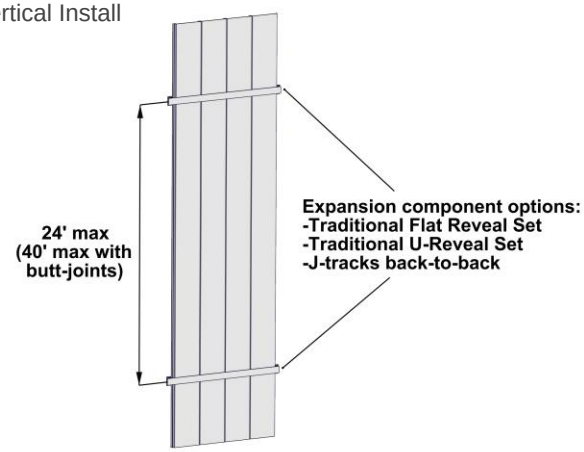

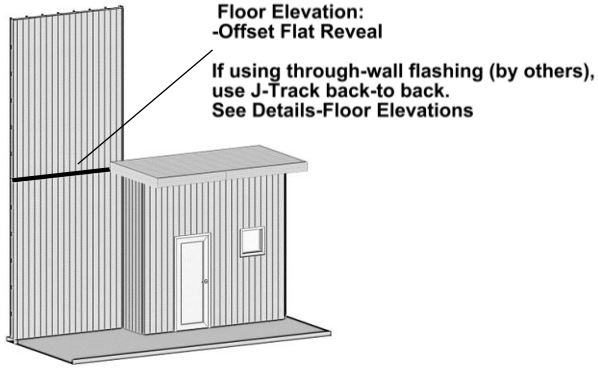

When using expansion components, each plank must terminate into a minimum of one (1) component.

⚠ TIP: To achieve expansion/contraction allowance, it is best practice to measure & mark for the adjustment of planks.

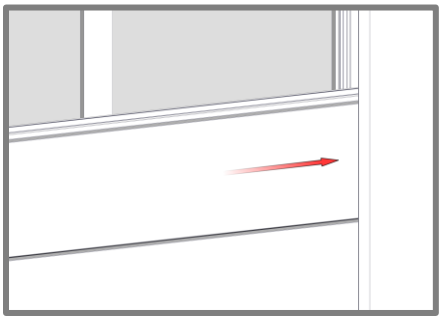

1. Slide Plank into trim component.

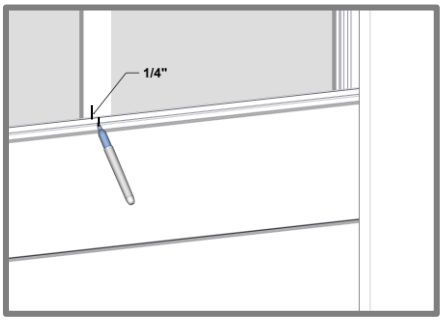

2. Measure 1/4” & mark for positioning.

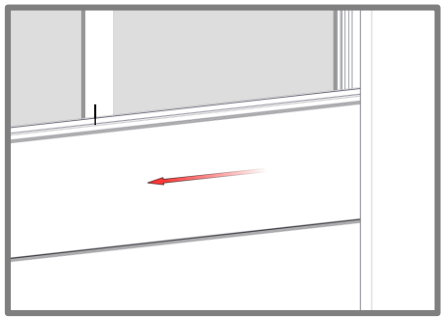

3. Slide Plank back 1/4" & align with mark.

Perimeter and field area limitations

- Measure and layout your wall area to consider plank & component alignment with fixtures, penetrations, and adjacent walls, for desired appearance. Consider using butt-joints along runs to minimize waste.
  Apply the same methodology for vertical installations.
- Longboard system typical dimensions:

Planks width	- 2 1/2” (64mm), 4” (102mm), 6” (152mm)
Perforated Planks width	- 2 1/2” (64mm), 6” (152mm)
Planks and Quick-Screen Clips depth	- 9/16” (14mm)
Trim Components depth	- 5/8” (15mm)

Seamless runs up to 24’ length planks (no butt-joints)

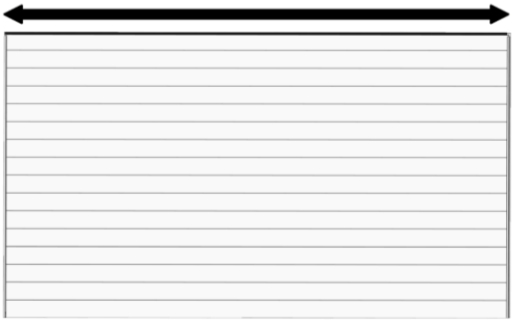

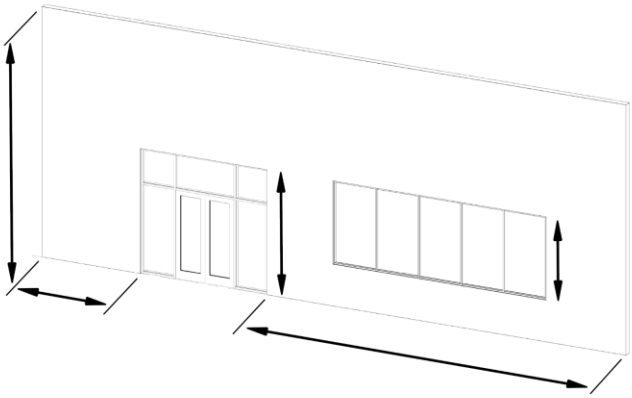

Runs up to 40’ length with staggered butt-joints

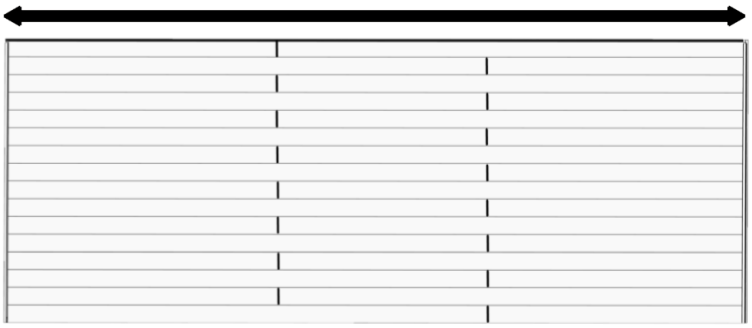

Runs greater than 40’ length, use a Reveal set to divide field area

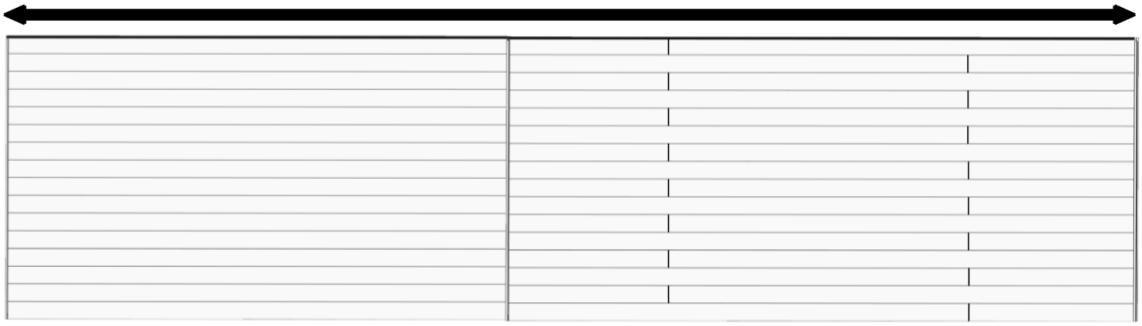

Component Layout

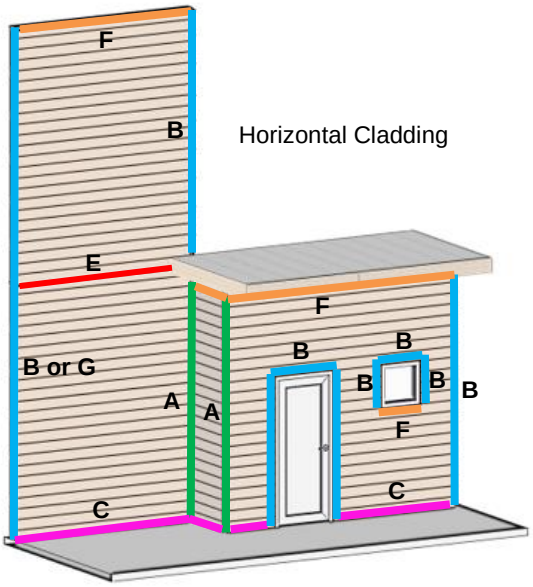

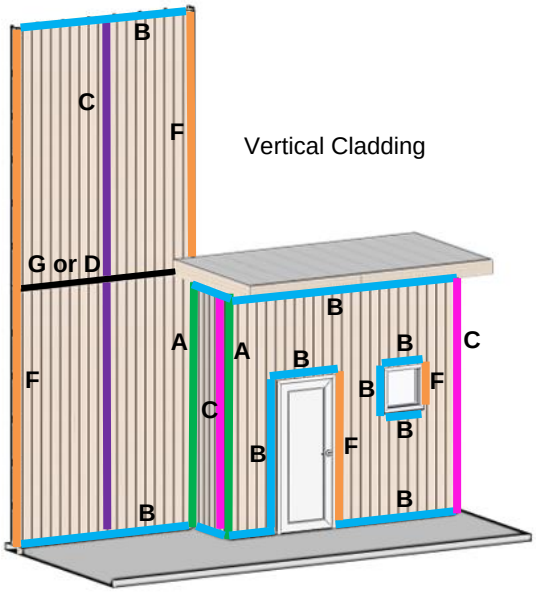

A **Corner Set 2”, Outside Corner 1”, Inside Corner 3/4"**

Location: Inside & outside corners of the installation area.

Details: Corner Set 2” recommended for vertical cladding installs.

B **J-Track (5/8”, 7/8”), Two Piece J-Track (5/8”, 7/8”, 1-3/8”)**

Location: Perpendicular to Planks (eg: sides of windows and doors), along gable end walls, other angled conditions, window/door headers and other penetrations.

Details: Notch the flange at the ends where they meet corner components.

C **Starter Strip, Starter J-Track 5/8”, Back-to-Back Starter Strip**

Location: Where starting with a full width Plank, typically along the bottom of the install for horizontal Planks.

Details: Alternatively, **Back-to-Back Starter Strip** can be used for vertical installs at the center of each cladding area for equal width ends.

D **Flat Reveal Set 1-1/2", U-Reveal Set 1-1/2"**

Location: Perpendicular to Planks, used to set plank widths.

Details: Two-piece component (cap & base). Precision Flat Reveal (one piece) 6’ 8” max span of planks

E **Compression Joint 1-3/8”**

Location: Parallel to Planks at floor elevations, (horizontal cladding).

Details: Used for expansion/contraction and settling/building movement at floor elevations.

F **Termination Set (5/8”, 7/8”, 1-3/8”)**

Location: Parallel to Planks along top of wall, underside of windows (horizontal cladding only), sides of windows/doors (vertical cladding only) and other penetrations.

Details: Install base only to start and end cap once planks are installed.

G **Offset Flat Reveal 2”**

Location: Perpendicular to Planks at floor elevations, (vertical cladding). For pre-fab wall construction, bridging the gap between adjacent wall panels.

Details: Used for expansion/contraction and settling/building movement at floor elevations.

Install Steps - Horizontal cladding

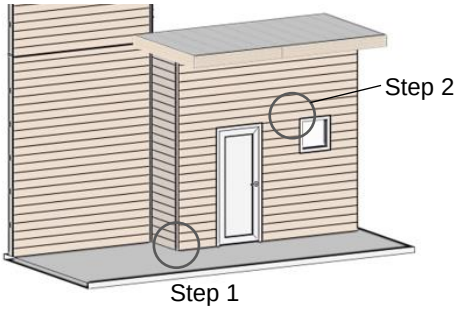

Step 1 – Corners

Install inside and outside corner bases or Craftsman inside and outside corners fastening every 16” O.C. with #10 Pan Head Screws. Corners typically extend from top to bottom of the area of application.

⚠ Check that components are level/plumb, flat and straight for best results.

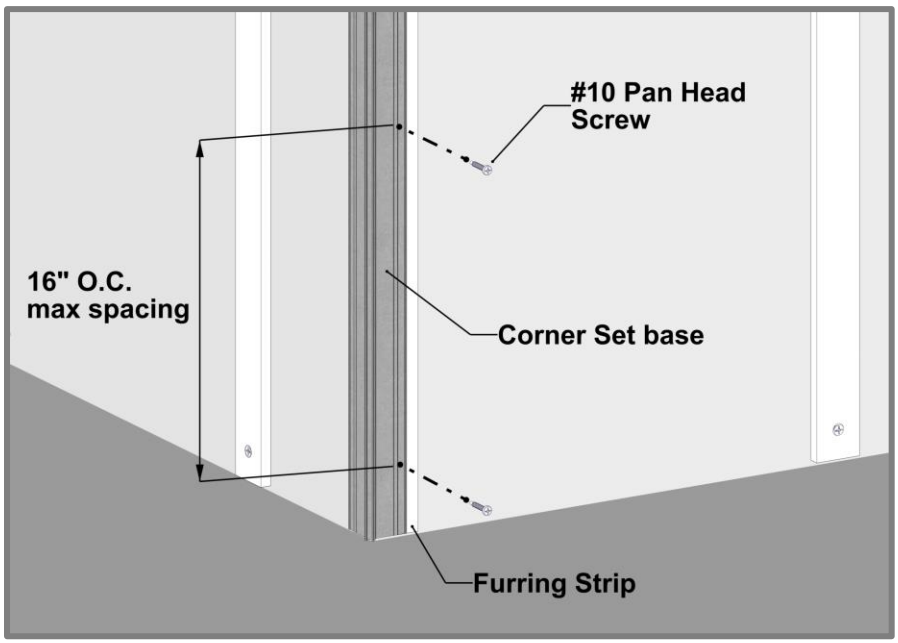

Step 2 – J-Track

Install J-Track or Two-Piece J-Track around windows and doors and at the edge of walls, fastening every 16” O.C. with #10 Pan Head Screws. Trims can be mitered for a clean corner look.

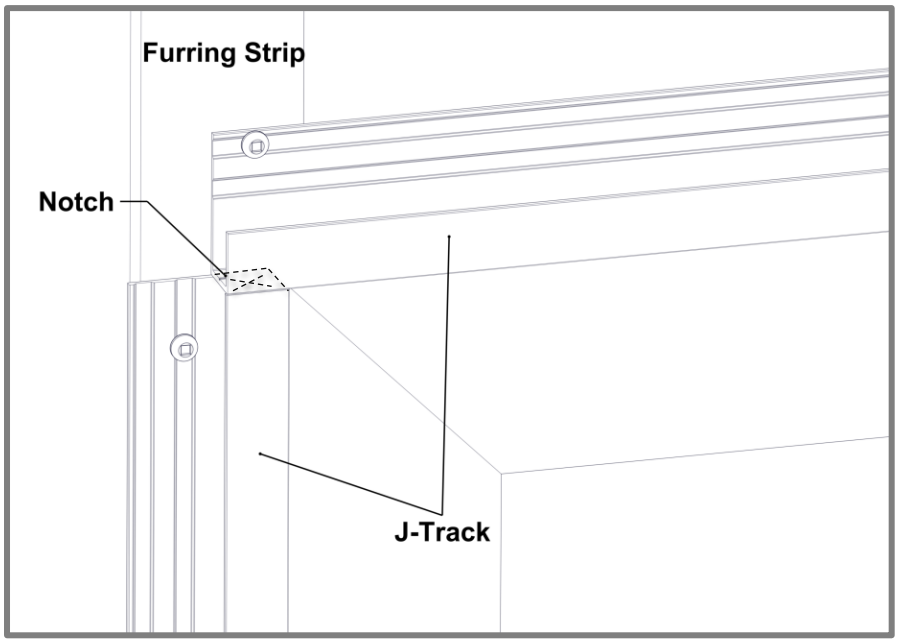

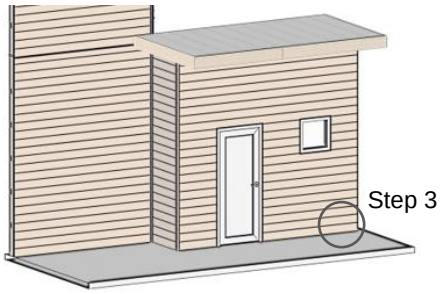

Step 3 – Starter Strip

Install the Starter Strip or Starter J-Track along the bottom of the wall(s), fastening every 16” O.C. max with #10 Pan Head Screws.
Fasten the Starter Strip at the Quick Screen Clip & the midpoint slot for a solid connection.

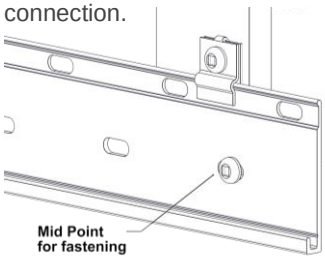

See **Appendix for project specific wind load requirements.**
Trims Fastening
-Table 3-6

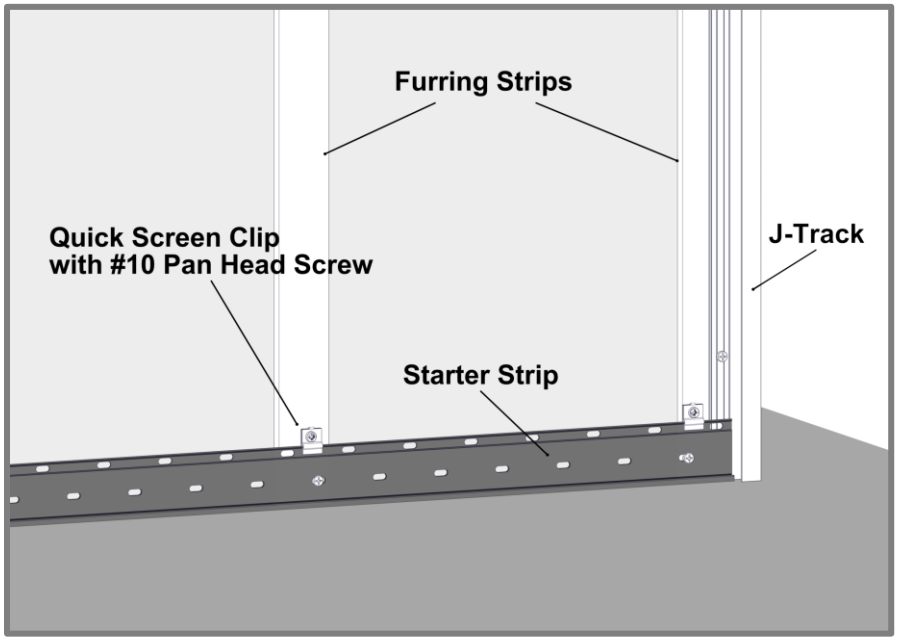

Step 4 – Flat Reveal
(Only if required, not shown on layout)

Install the Flat Reveal Set (base only) at the desired plank widths, fastening every 16” O.C. with #10 Pan Head Screws.

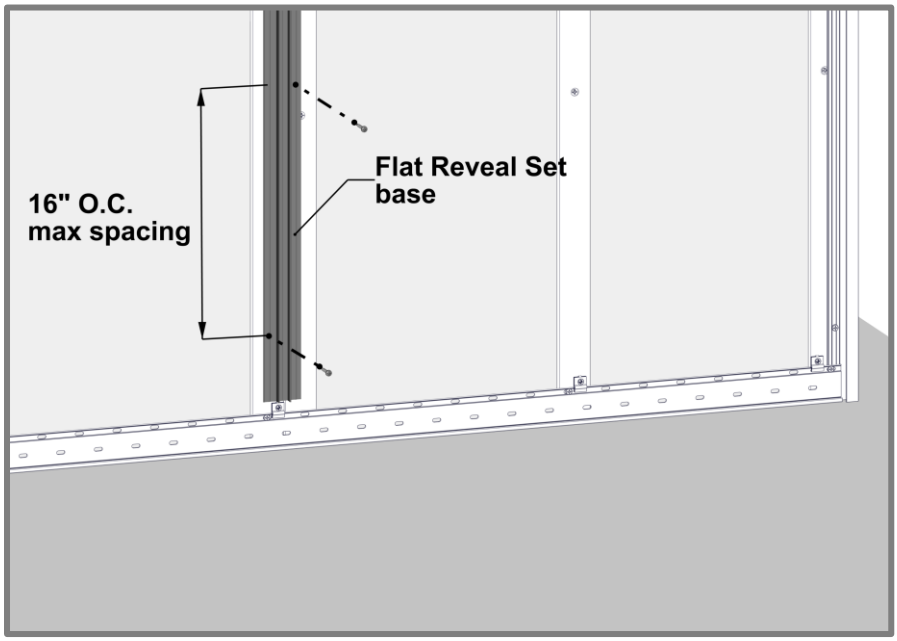

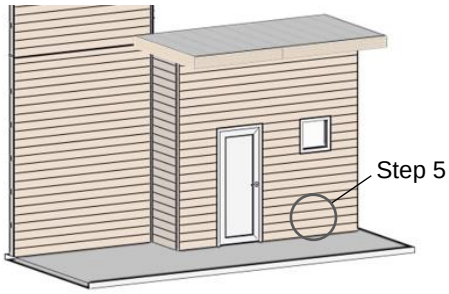

PLANK PREPARATION DURING INSTALL

1. **No** Taped/Drilled ends (cut off 1/2" each end).
2. **No** Damage/dents and correct plank sequence per project.
3. **Confirm** allowance for expansion/contraction & confirm trim/caps cover.
4. **Confirm** level substrate, shims might be required for a flat /straight plank install.

Step 5 – Planks

Place the planks onto the tongue of the Starter Strip, fully engaging the tongue.
It is good practice to check your installation every 2-3 rows for level/plumb and flat or straight, for best results.

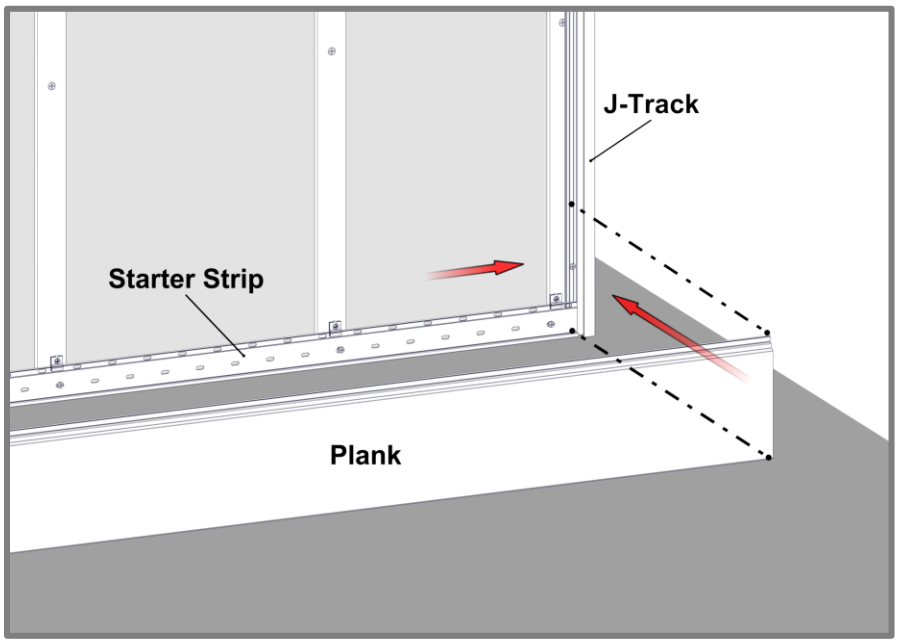

When installing Planks, ensure there is sufficient room for expansion and contraction of each Plank, also confirming component caps will cover.

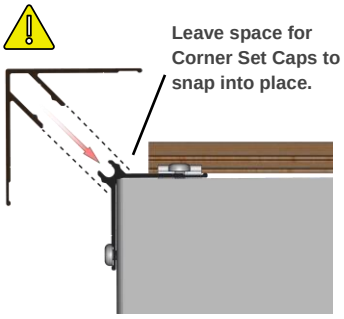

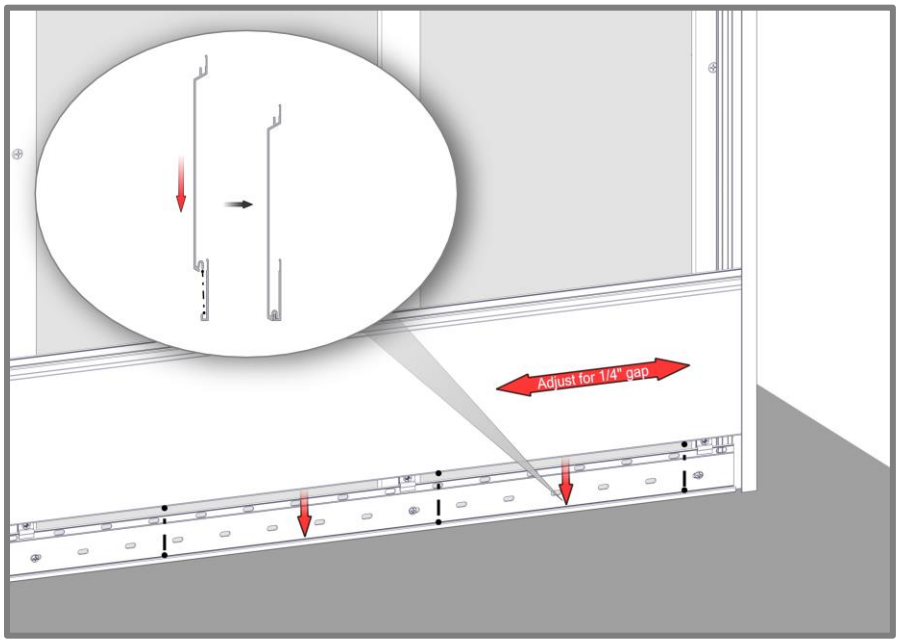

Install Quick Screen Clips every 32” (813mm) O.C. max spacing. Hard fasten only one point at the center of each plank, except where butt-joints are used. Shim Quick Screen Clips where needed to correct any substrate inconsistencies.

Note: Quick Screen Clips are included with the order for 32” O.C. spacing. If spacings of 16” O.C. are required for high wind load areas extra clips will need to be ordered.

See **Appendix for project specific wind load requirements.**
Plank Fastening
- Wind Load Tables 3-6

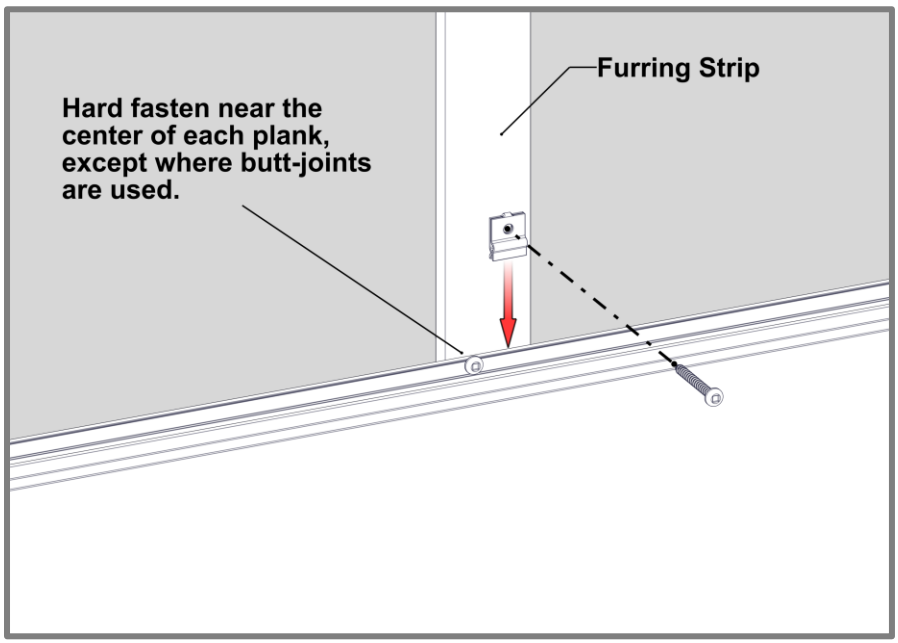

Install planks as needed. Where anchoring the planks securely can only be achieved over component flanges; split the Quick Screen Clip and use one piece on the front.
This will maintain each plank’s ability to expand and contract.

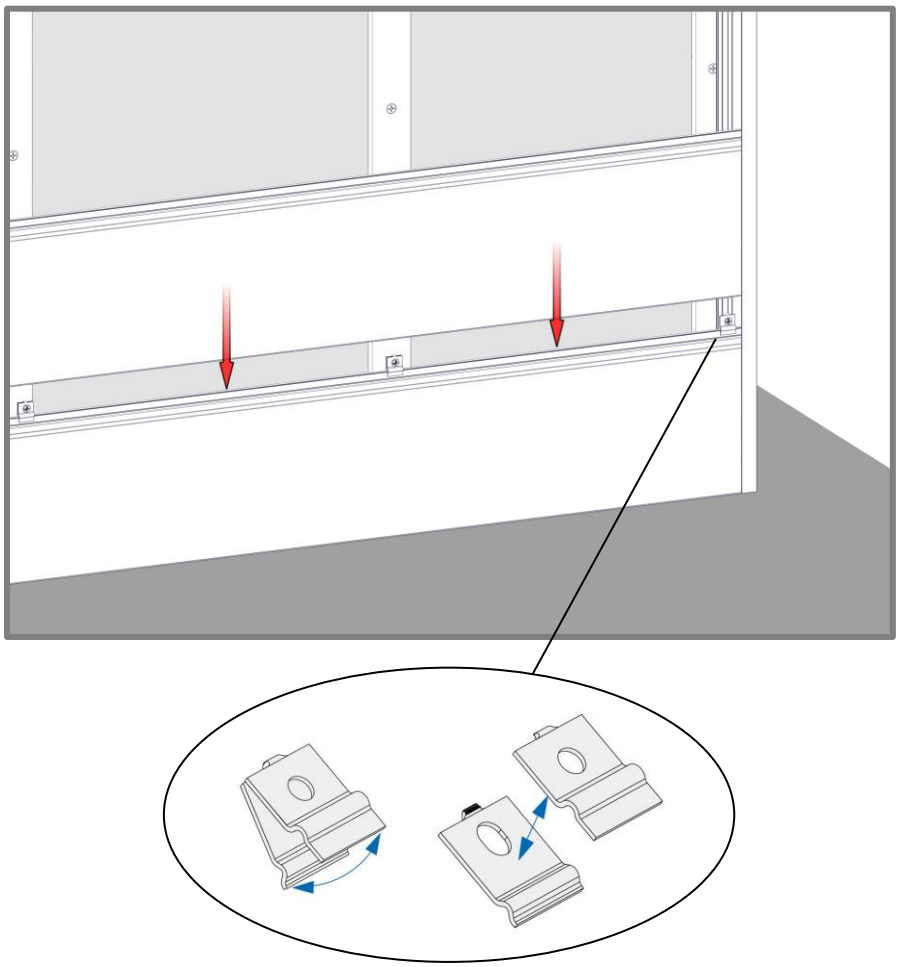

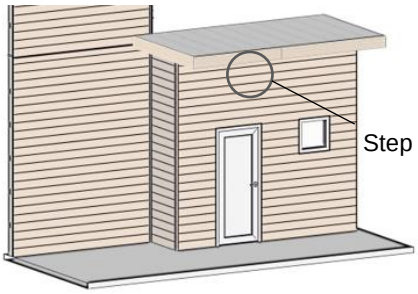

Step 6 – Termination Set

Install Termination Set (base only), fastening every 16” O.C.

Where terminating cut planks, provide a positive stop approximately every 16” (406mm).

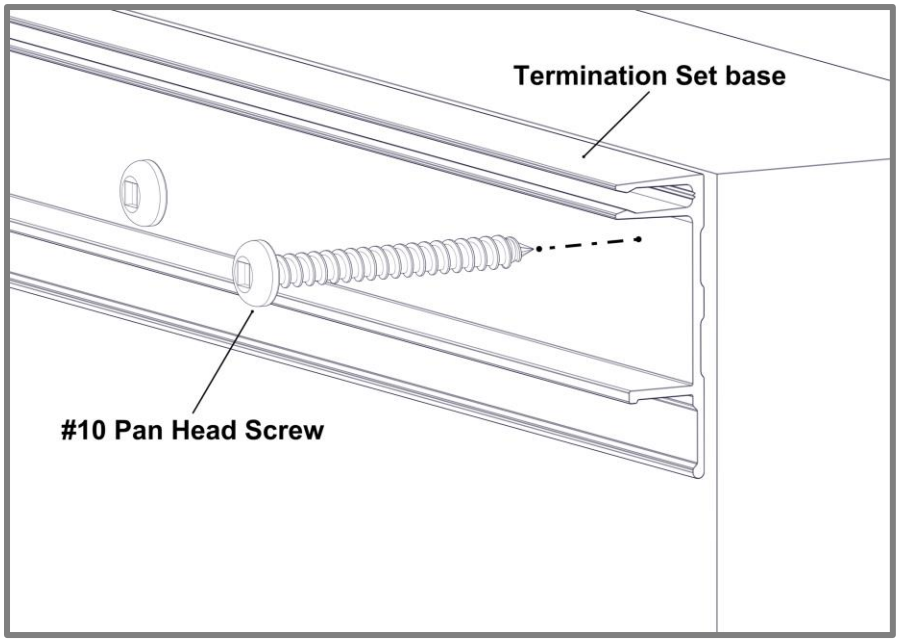

Step 7 – Last Row of Planks

Rip the last Plank, cutting it to width to suit the installation area(s). Install edge plank with a 1/4” gap and screw to lock the Plank into place.

Skip to Page 22 for Finishing Steps.

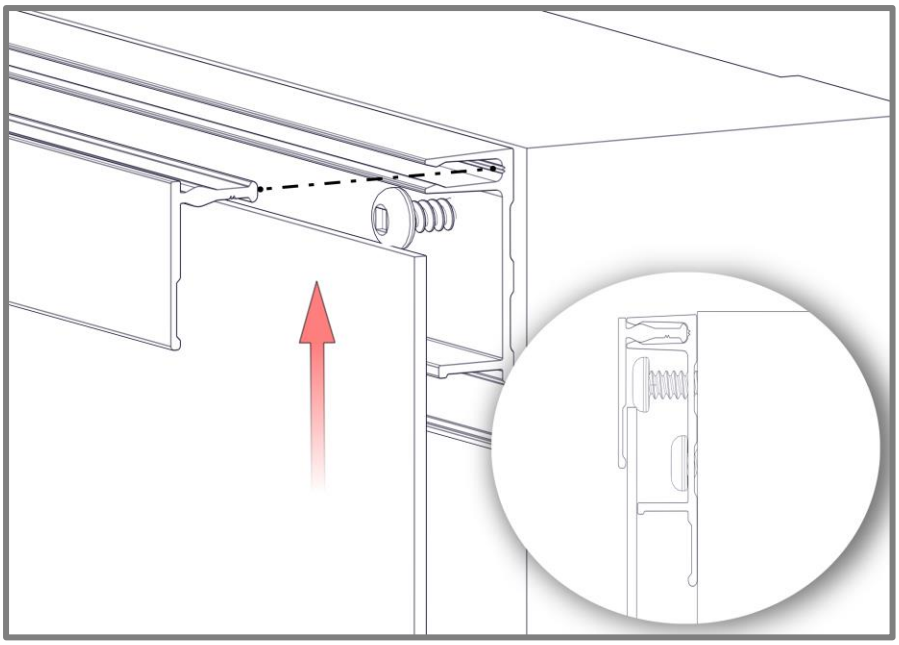

This Visual image cannot be displayed. The file may have been moved, renamed, or deleted. Verify that the link points to the correct file and location.

Install Steps - Vertical Cladding

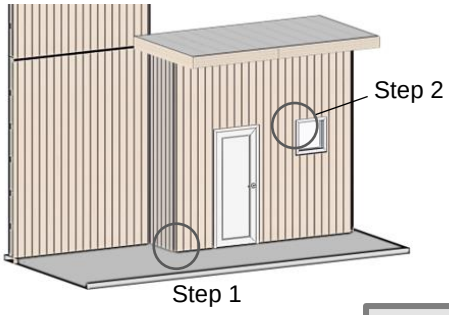

Step 1 – Corners

Install inside and outside corner bases, fastening every 16” O.C. with #10 Pan Head Screws. Corners typically extend from top to bottom of the area of application.

⚠ Check that components are level/plumb, flat and straight for best results.

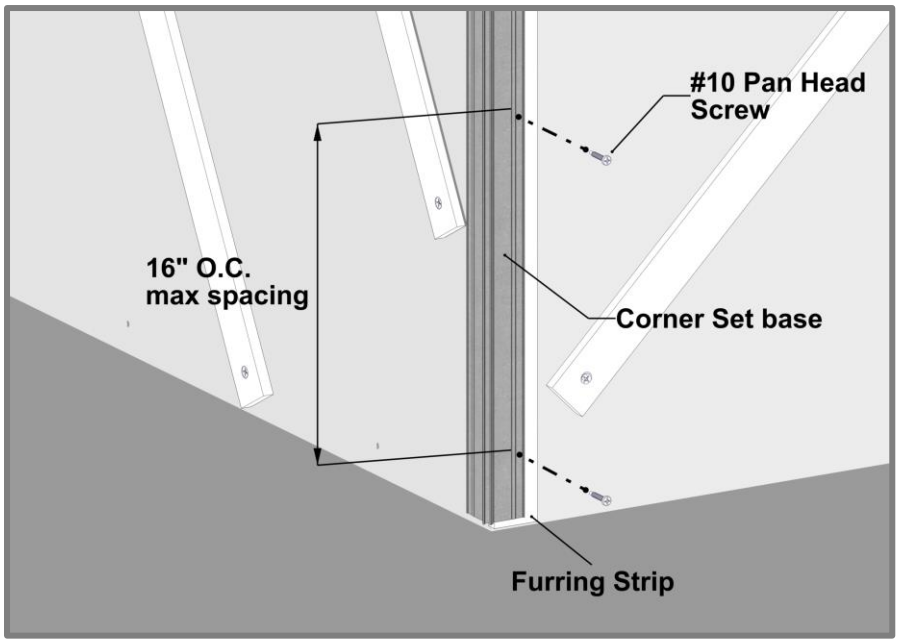

Step 2 – J-Track

Install J-Track or Two-Piece J-Track around windows and doors and at the top & bottom of walls, fastening every 16” O.C. with #10 Pan Head Screws. Trims can be mitered for a clean corner look.

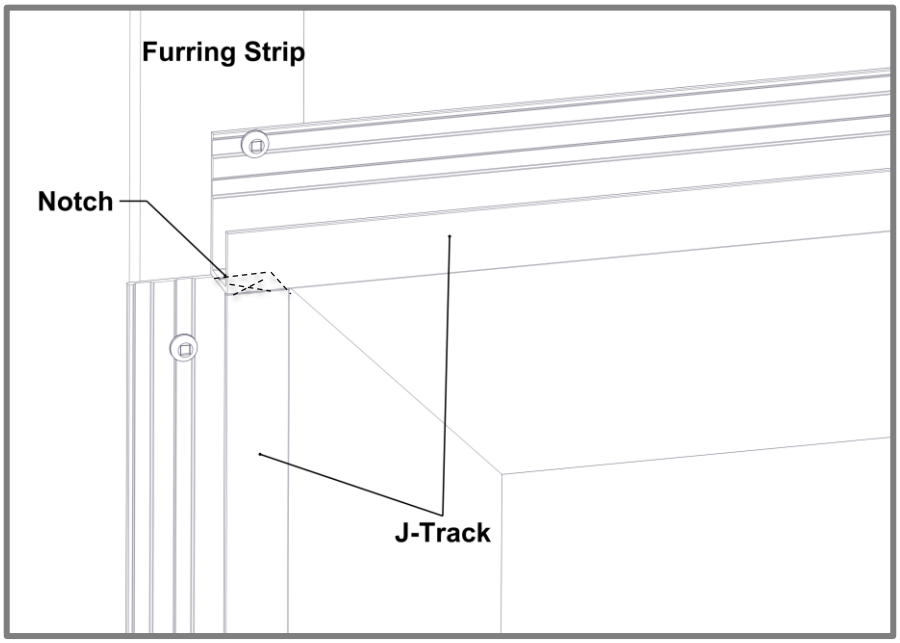

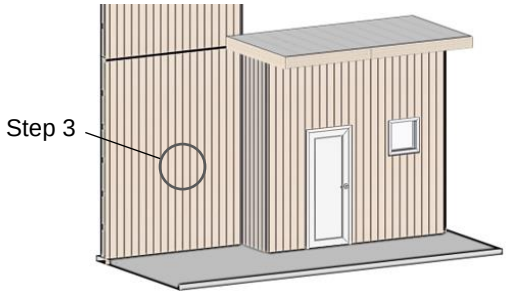

Step 3 – Back-to-Back Starter

Install the Back-to-Back Starter Strip at the center of the wall area to achieve equal width ends. Fasten both sides every 16” O.C. max with #10 Pan Head Screws.

⚠The Back-to-Back Starter should be secured with a Quick-Screen Clip on both sides of the component.

Alternately, the Starter Strip can be used and installed at the corner of the wall(s) over the Corner Set base and the Starter J-Track used at the edge of the walls.

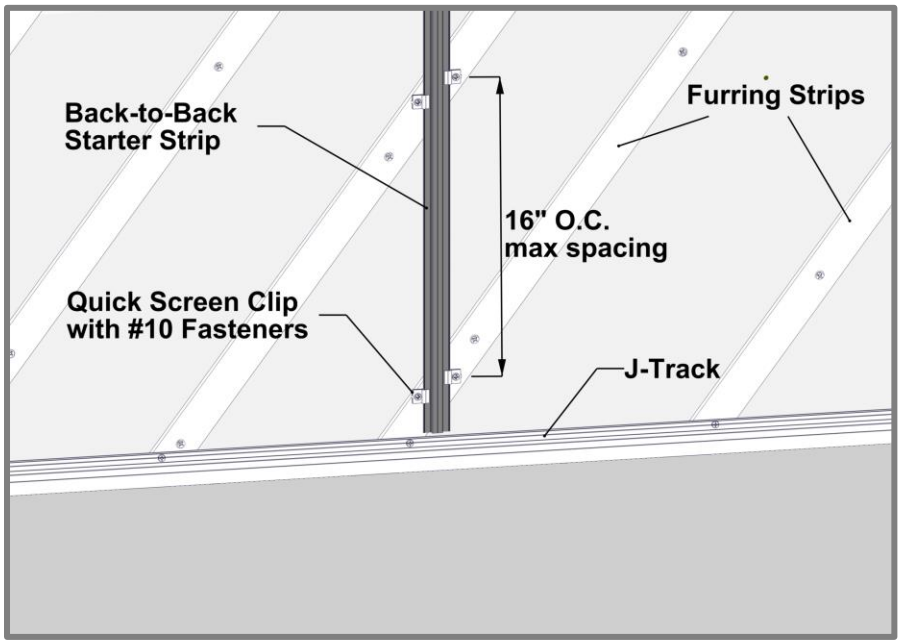

Appendix for project specific wind load requirements.
Trims Fastening
-Table 3-6

Step 4 –Flat Reveal or Offset Flat Reveal (2”)
(Only if required, not shown on layout)

Install the Flat Reveal Set (base only) at the desired plank widths, fastening every 16” O.C. with #10 Pan Head Screws.

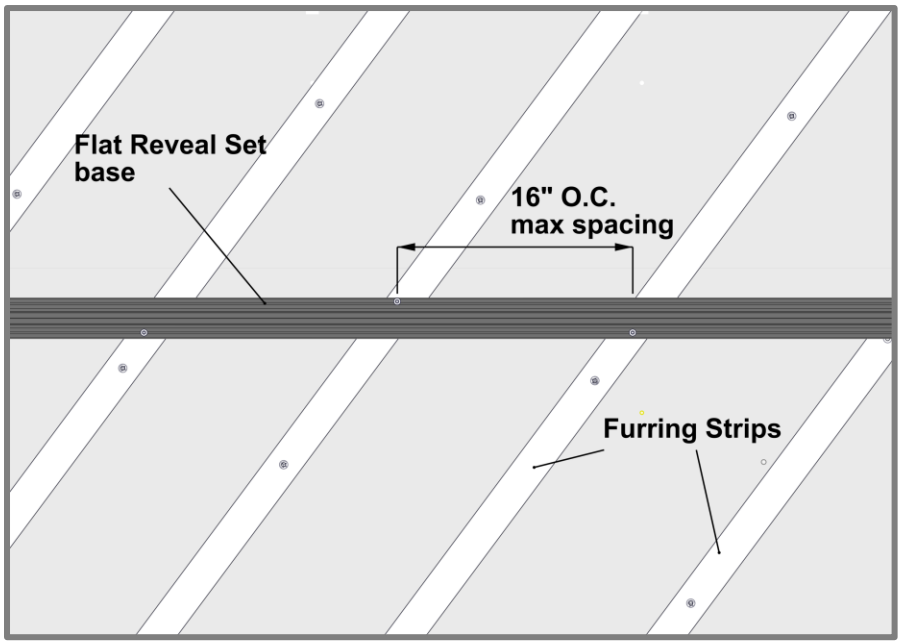

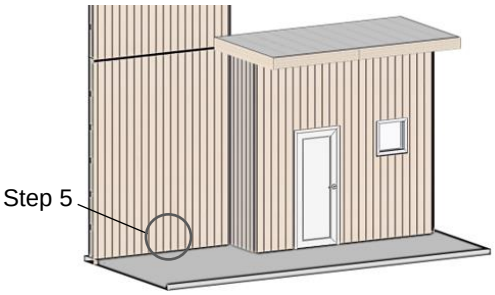

PLANK PREPARATION DURING INSTALL

1. **No** Taped/Drilled ends (cut off 1/2" each end).
2. **No** Damage/dents and correct plank sequence per project.
3. **Confirm** allowance for expansion/contraction & confirm trim/caps cover.
4. **Confirm** level substrate, shims might be required for a flat /straight plank install.

Step 5 – Planks

Place the planks into the groove of the Starter Strip, engaging the tongue.
It is good practice to check your installation every 2-3 rows for level/plumb and flat or straight, for best results.

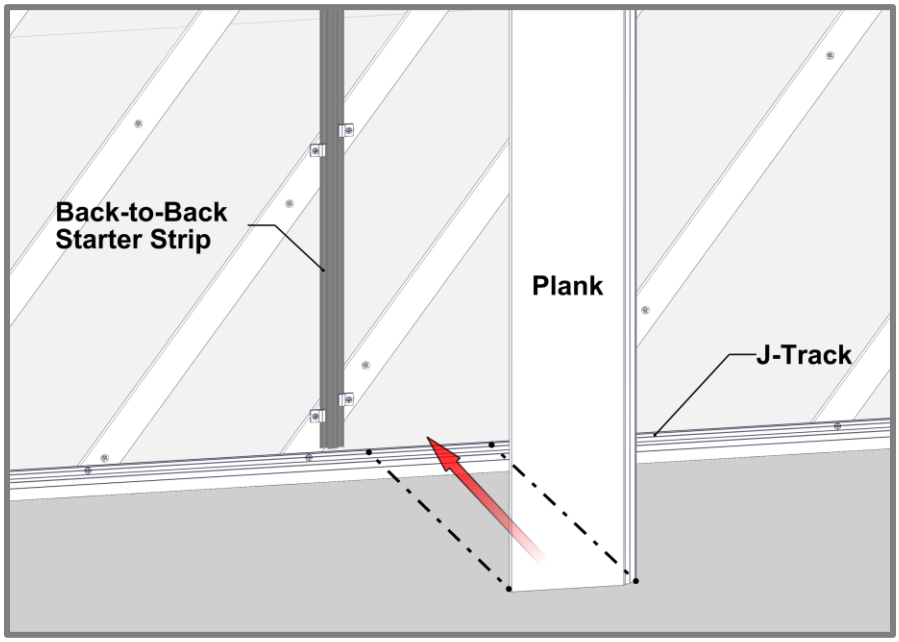

Ensure there is sufficient room for expansion and contraction of each Plank, also confirming component caps will cover.

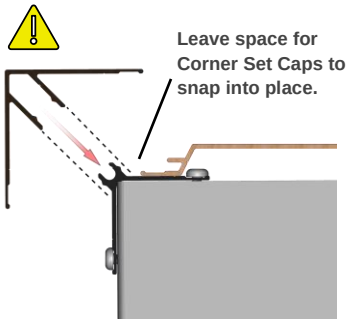

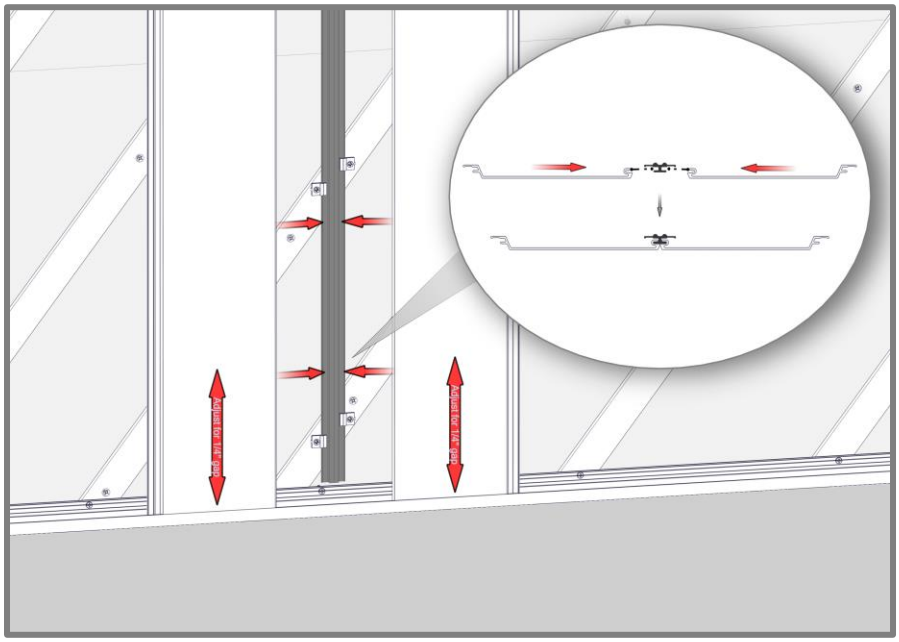

Install Quick Screen Clips every 32” (813mm) O.C. max spacing. Hard fasten only one point at the center of each plank, except where butt-joint are used. Shim Quick Screen Clips where needed to correct any substrate inconsistencies.

Note: Quick Screen Clips are included with the order for 32” O.C. spacing. If spacings of 16” O.C. are required for high wind load areas extra clips will need to be ordered.

See **Appendix for project specific wind load requirements.**
Plank Fastening
- Wind Load Tables 3-6

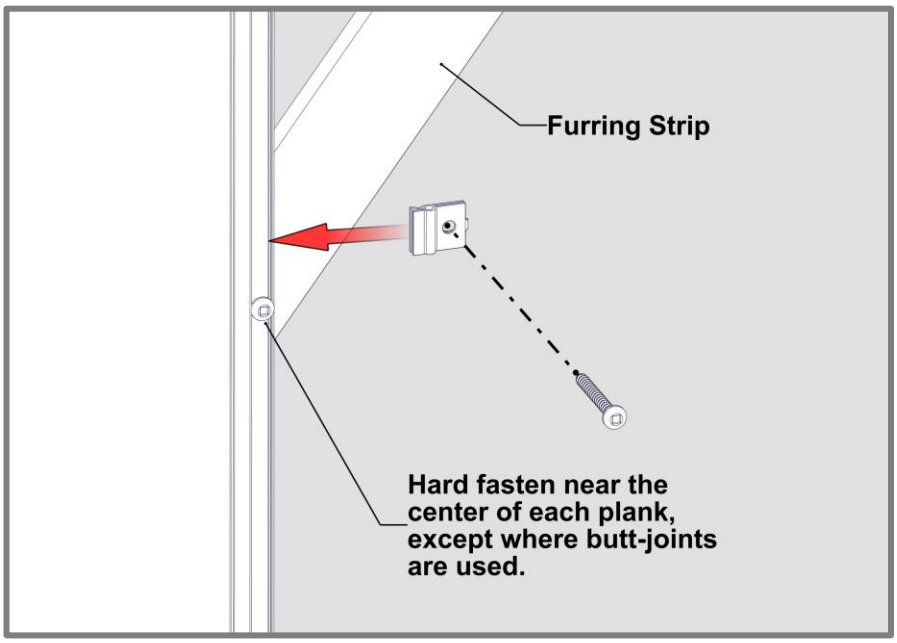

Install planks as needed. Where anchoring the planks securely can only be achieved over component flanges; split the Quick Screen Clip and use one piece on the front.
This will maintain each plank’s ability to expand and contract.

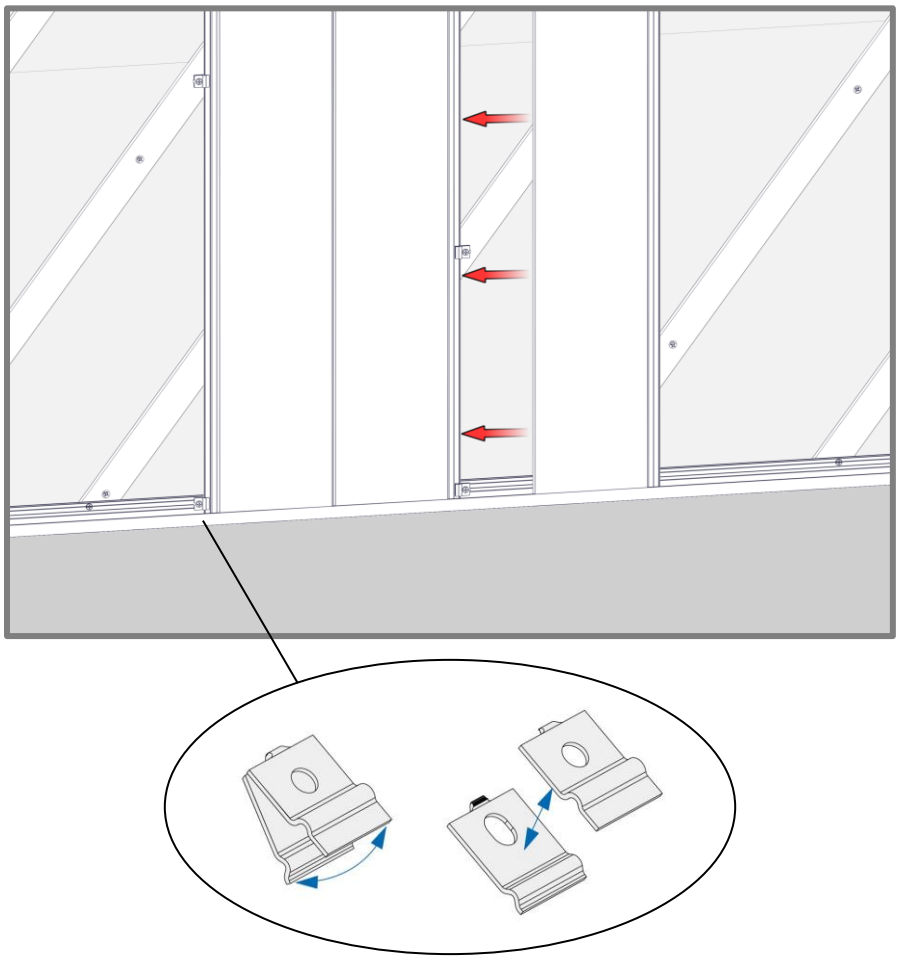

This Visual image cannot be displayed. The file may have been moved, renamed, or deleted. Verify that the link points to the correct file and location.

Step 6 & 7

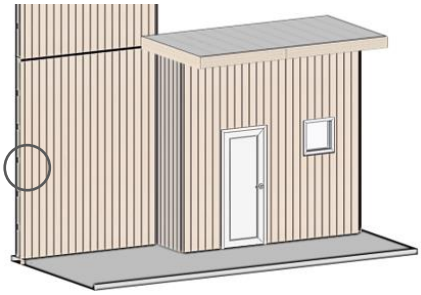

Step 6 – Termination Set

Install Termination Set (base only), fastening every 16” O.C.

Where terminating cut planks, provide a positive stop approximately every 16” (406mm).

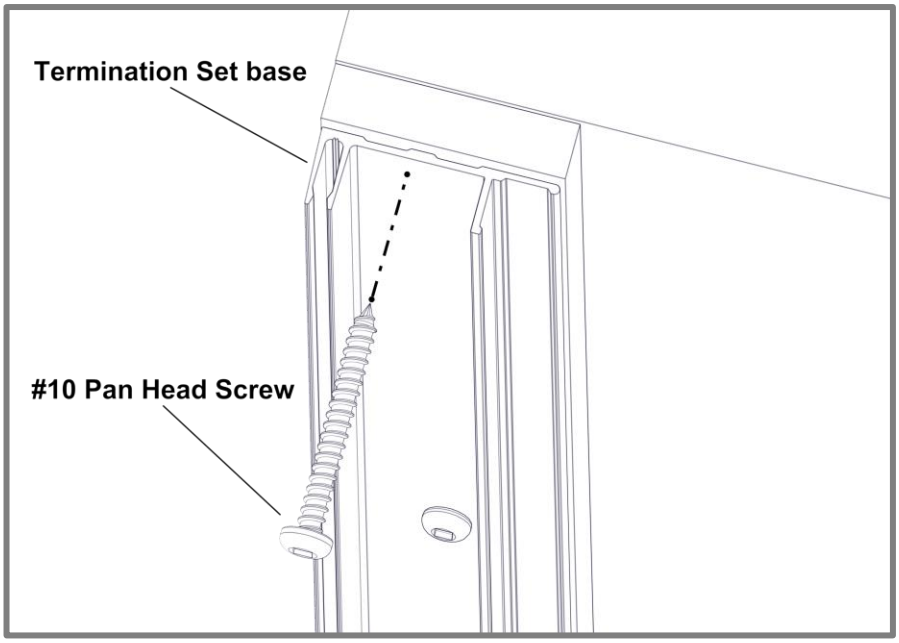

Step 7 – Last Row of Planks

Rip the last Plank, cutting it to width to suit the installation area(s). Install edge plank with a 1/4” gap and screw to lock the Plank into place.

See next page for Finishing Steps.

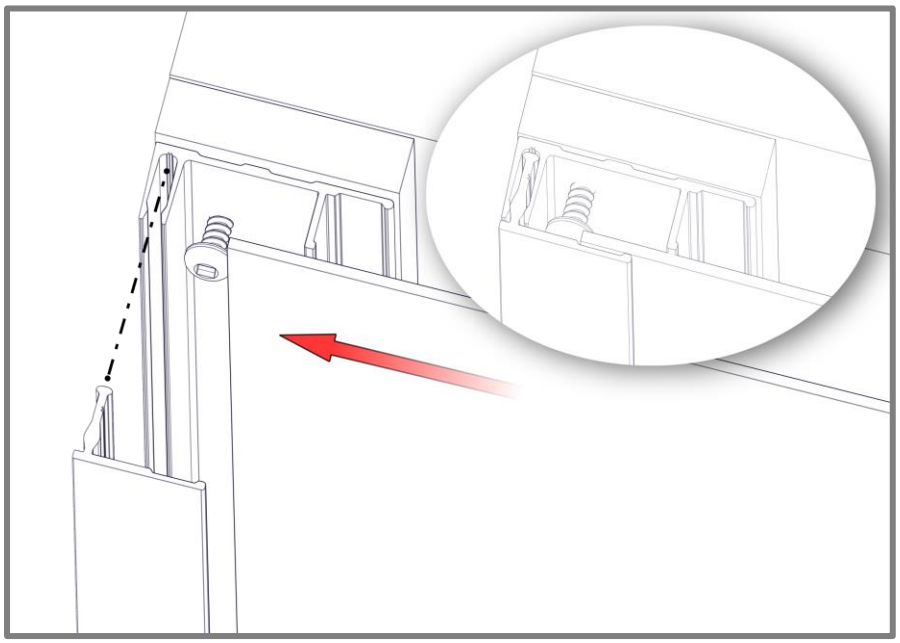

Finishing Steps - Once planks are installed, finish off the perimeter trims with caps from two-piece sets.

Component Caps

Location: Installed onto the base of the two-piece sets.

Details: If required, use a rubber mallet or hammer and block to protect the finish during this process. Confirm Caps cover Planks with sufficient room for expansion and contraction.

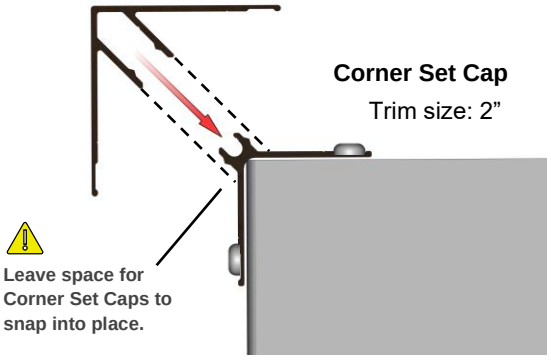

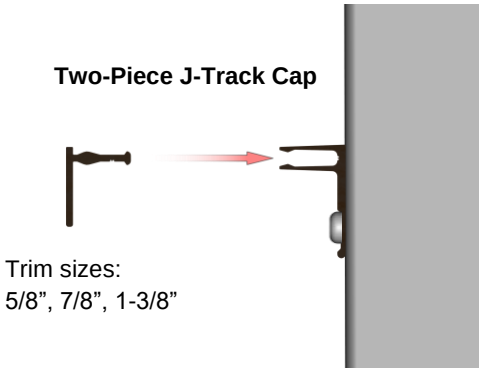

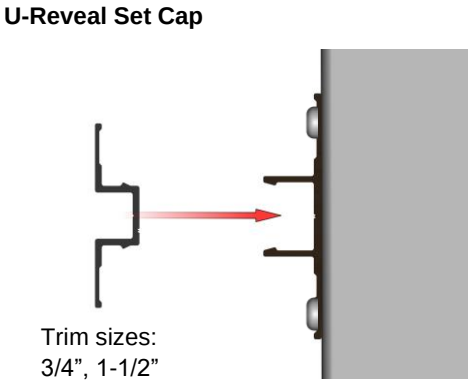

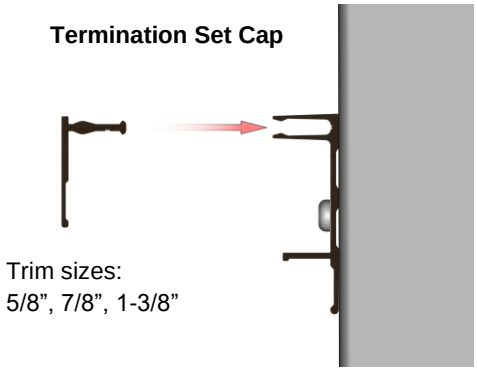

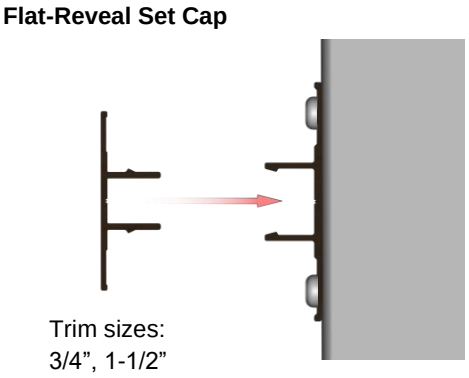

Details

Single Butt-Joints

- Consider using butt-joints along runs to minimize waste.
- ⚠ When installing staggered butt-joints, use the Butt-Joint Fastening Kit to ensure joints do not open up **(See Detail A & B)**.
  Fasteners should be placed at the uppermost location of the plank flange, to not interfere with the next plank engaging the tongue and groove properly. At the butt-joint, fasteners should be anchored into the Butt-Joint backer plate.
  (See Detail C)
- Rivets can be used for single butt-joints, however clearance of the rivets and room for movement is required.
- On exposed cuts such as butt-joints, trim ends or similar, use touch-up paint pens (purchased separately) to finish the ends of the two (2) planks at the butt-joint.
- DO NOT hard-fasten a plank to a component trim, as this will restrict its ability to expand & contract into the component.
- If no butt joints along the length, it is good practice to hard-fasten each plank directly through the flange near the center, to keep the planks from migrating.
- DO NOT hard-fasten more than one (1) location per plank.
- Hard fasten at the butt-joint or the center of each plank run.

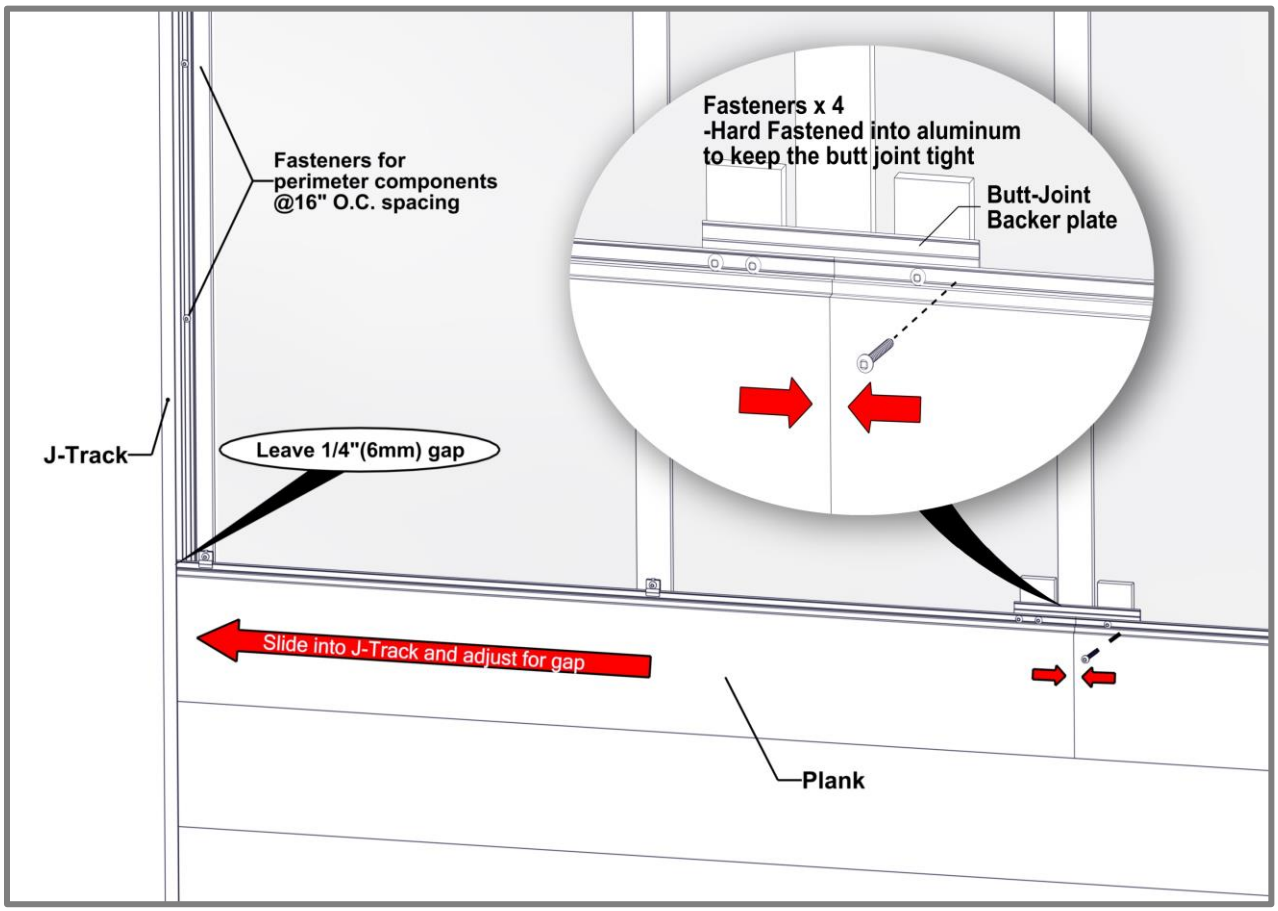

Detail A -Horizontal Cladding

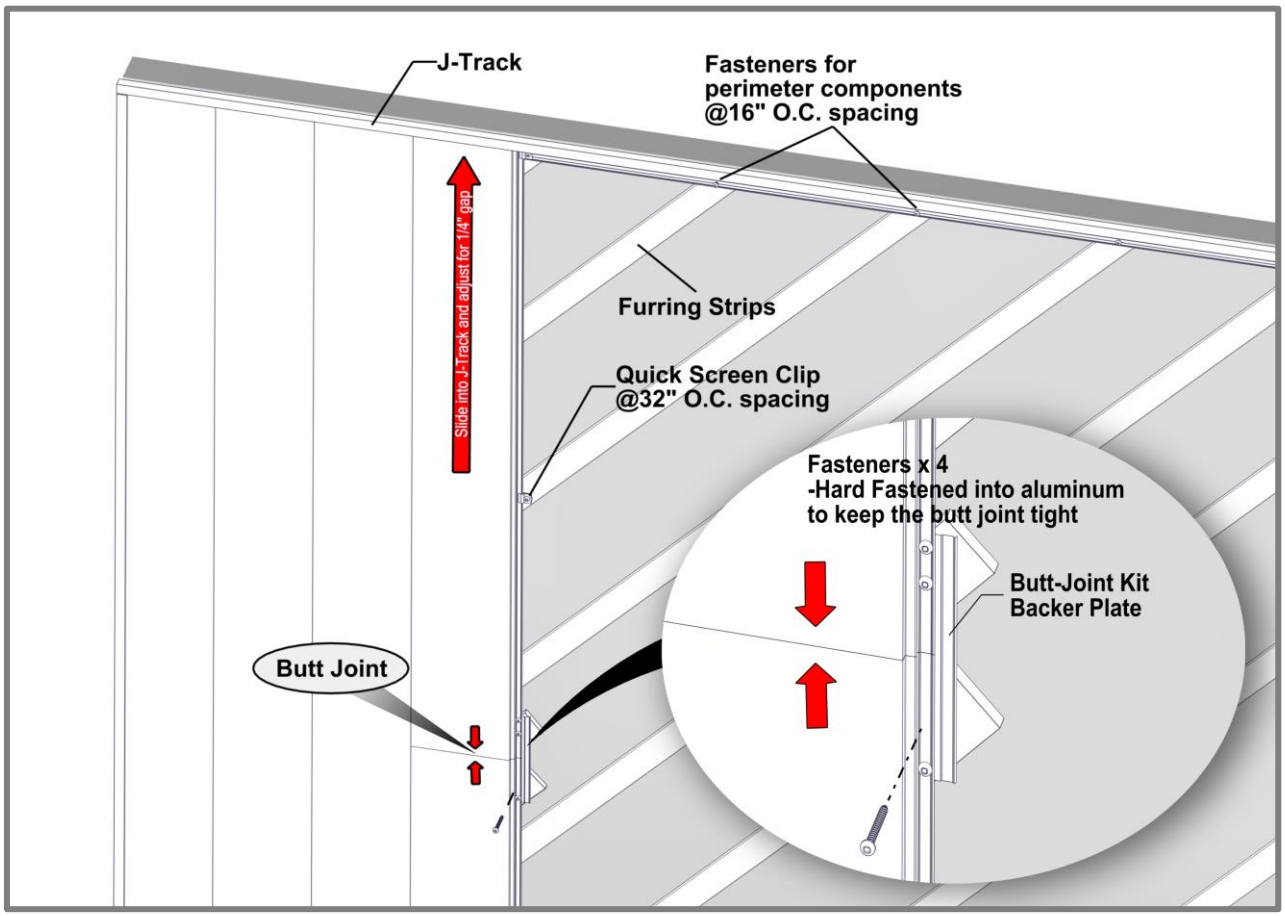

Detail B -Vertical Cladding

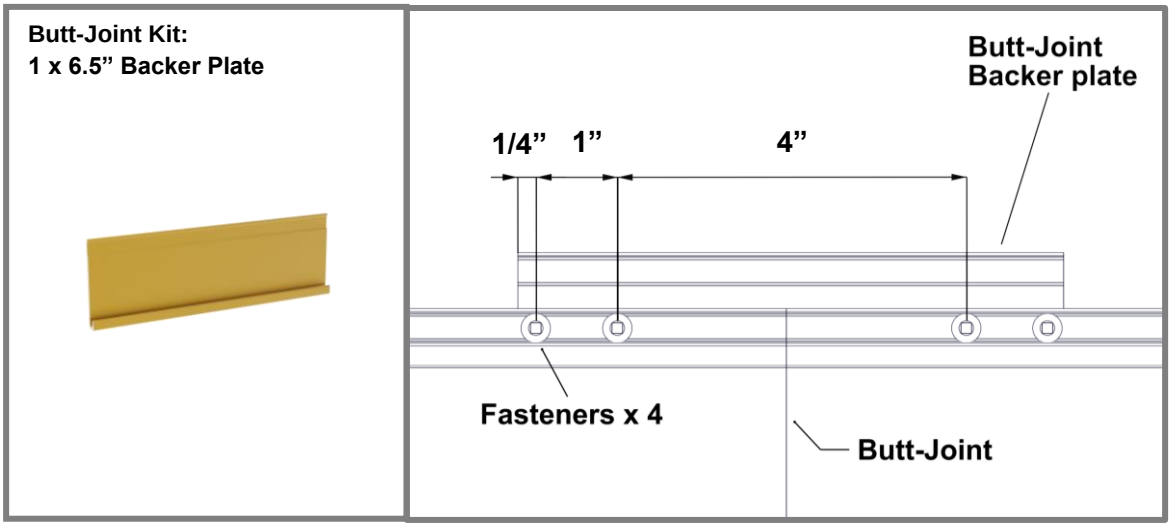

Detail C -Backer Plate (Hard Fastened)

Multiple Floating Butt-Joints

- ⚠ When installing staggered multiple floating butt-joints, use the Butt-Joint Fastening Kit to ensure joints do not open up. Rivets should be placed at the center of the plank flange, to not interfere with the next plank engaging the tongue and groove properly. **(See Detail D)**
- MUST HAVE furring strips or girts to allow room for movement.
- Recommended to be installed between furring strips or framing members to avoid contact which would restrict movement. **(See Detail E)**
- On exposed cuts such as butt-joints, trim ends or similar, use touch-up paint pens (purchased separately) to finish the ends of the two (2) planks at the butt-joint.
- DO NOT hard-fasten a plank to a component trim, as this will restrict its ability to expand & contract into the component.
- DO NOT hard-fasten more than one (1) location per multiple plank run.
- Hard fasten near the center of the multiple plank run.

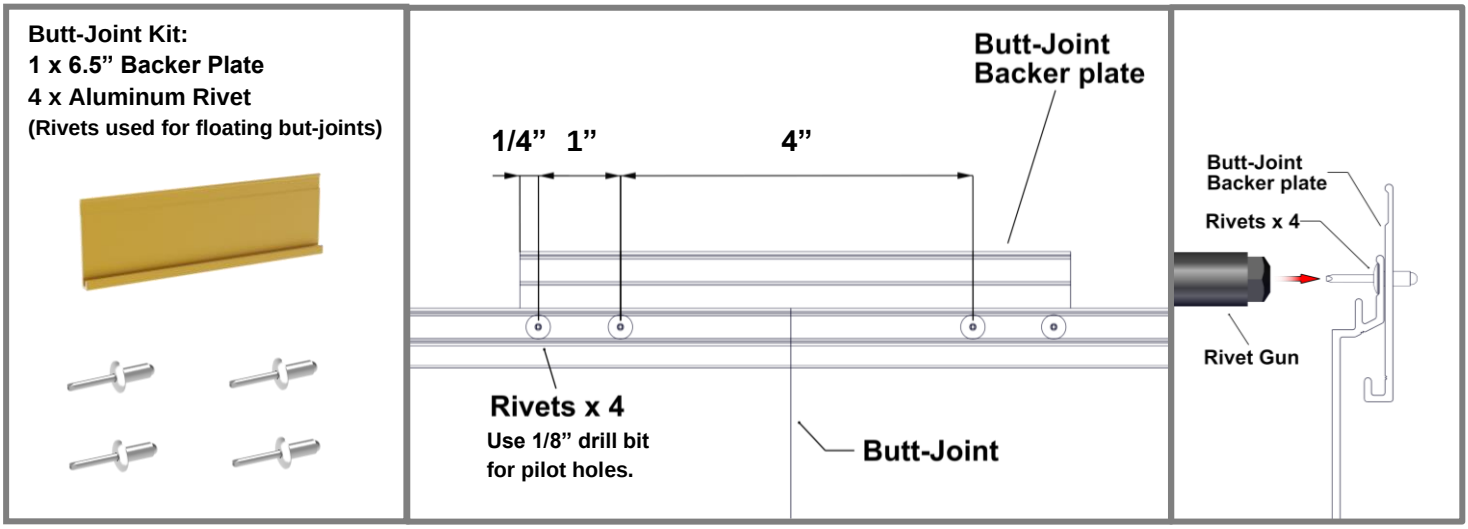

Detail D -Floating Butt-Joint

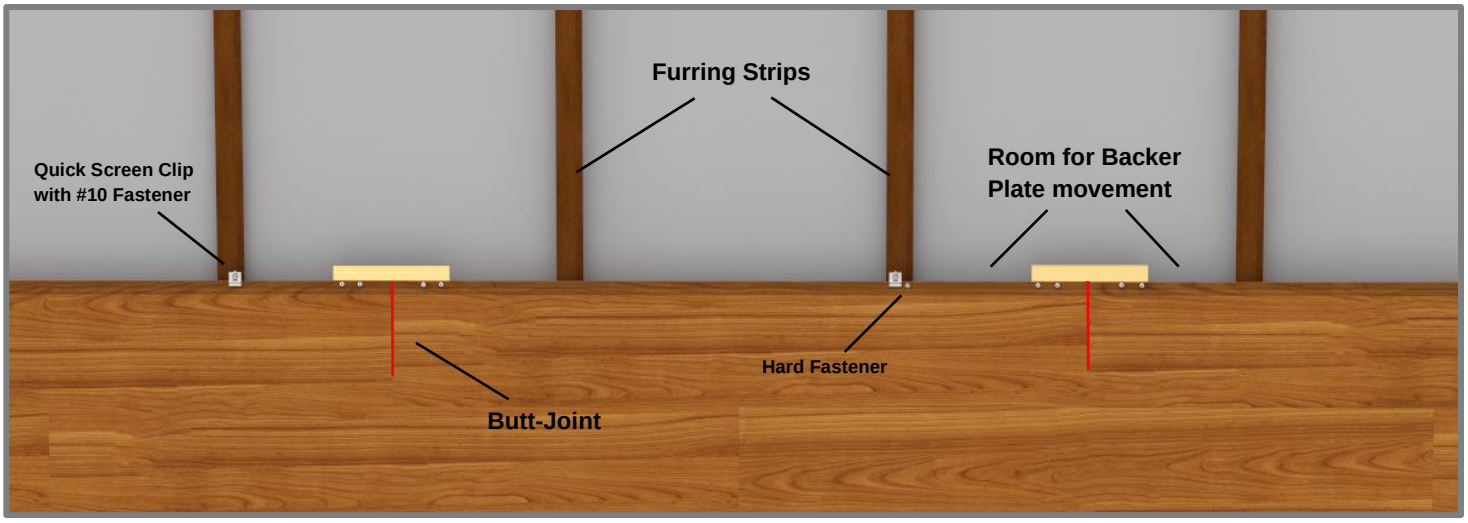

Detail E -Butt-Joint Movement

Floor elevation

Compression Joint

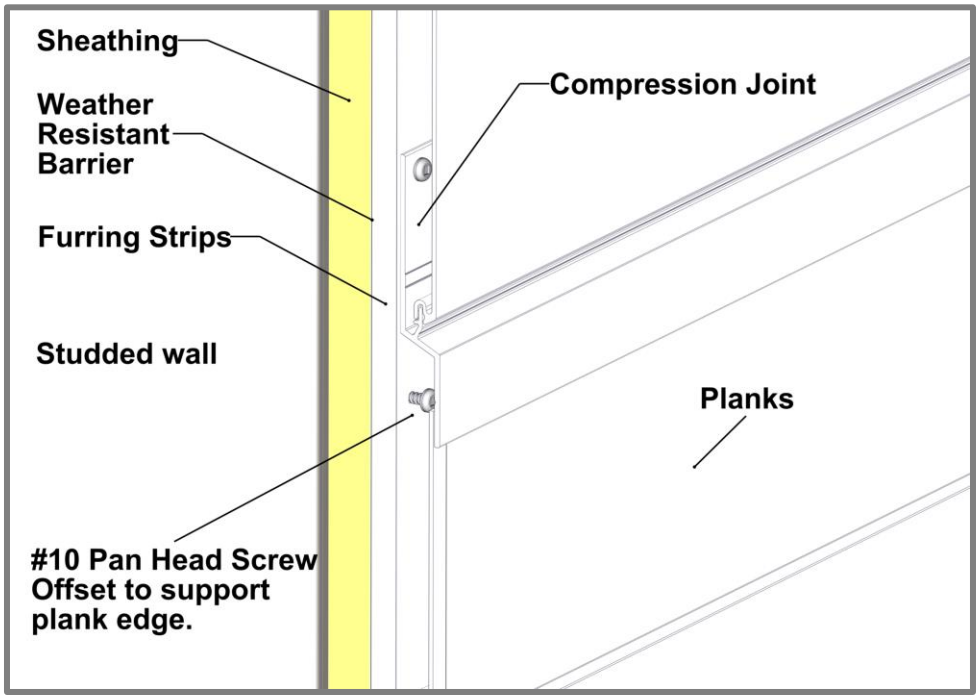

Type:	Compression Joint, Termination set/Starter J-Track, J-Track back-to-back.
Location:	Typically, at every floor elevation and where through-wall flashing is required.
Details:	Note the orientation of planks for through-wall flashing install.

Through-wall Flashing

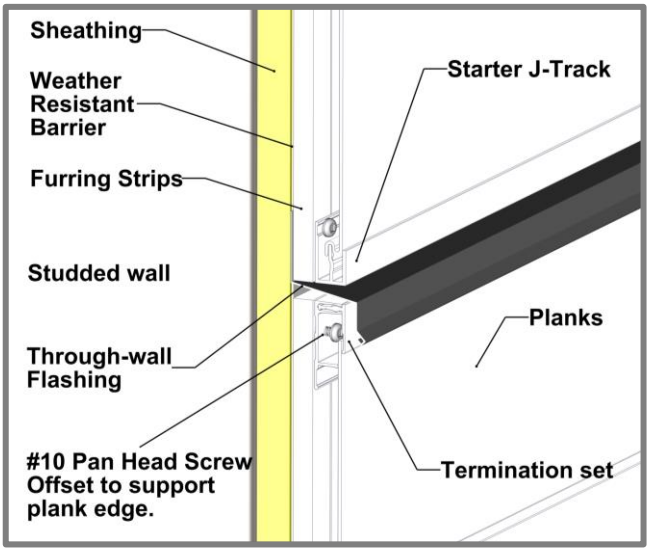

Horizontal Install

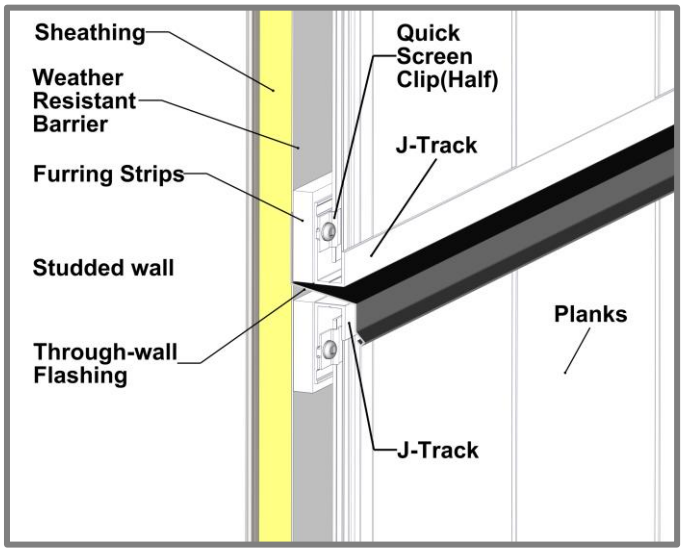

Vertical Install

Expansion reveals

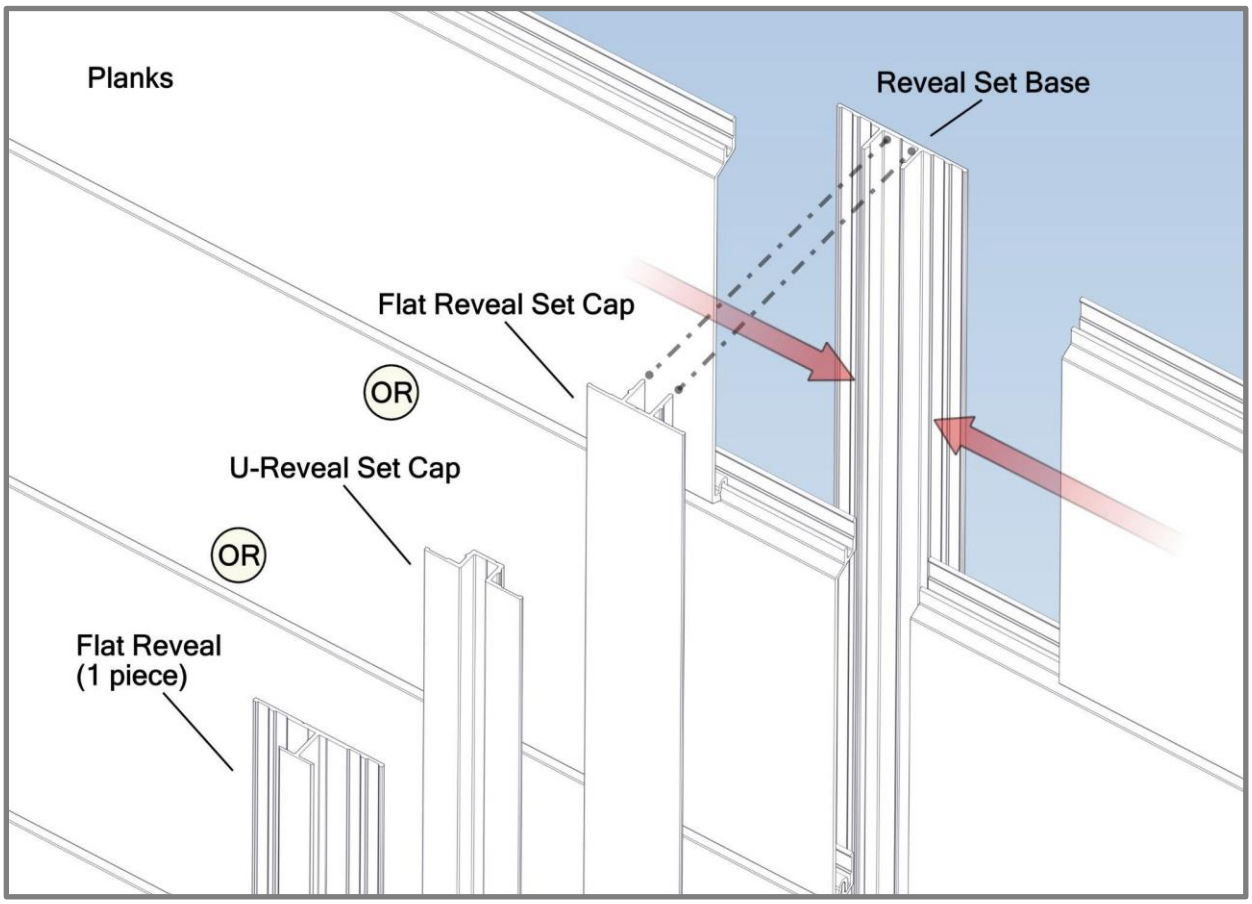

Type:	Traditional Flat Reveal Set/Traditional U-Reveal Set/Precision Flat Reveal**.**
Location:	Typically for wall areas greater than 24' (7.3m) long (no butt-joints) or 40' (12.2m) long (With staggered butt-joints). See **Expansion and contraction** for details.
Details:	Install base only to start and end cap once planks are installed.

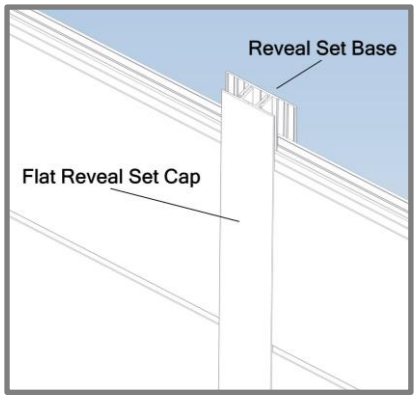

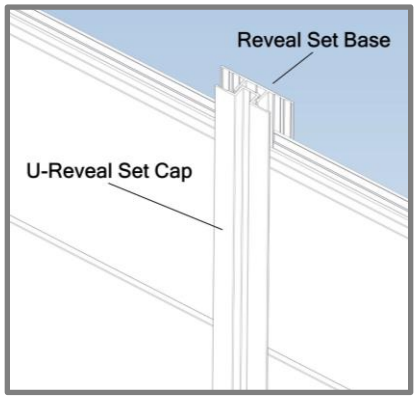

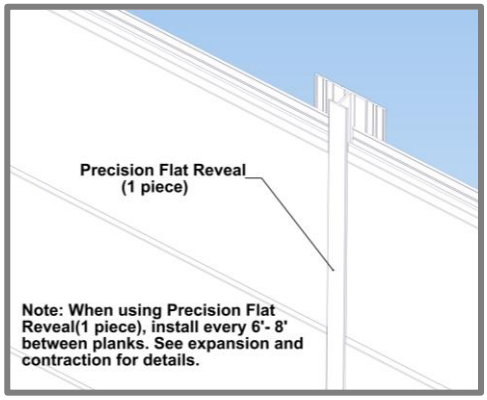

Appendix

Expansion and Contraction Tables

TABLE 1 - IMPERIAL

		AVERAGE TEMPERATURE AT TIME OF CUTTING & INSTALLATION										
	°C	-50	-40	-30	-20	-10	0	10	20	30	40	50
	°F	-58	-40	-22	-4	14	32	50	68	86	104	122
MIN/MAX POST CONSTRUCTION TEMP. °C	°F	EXPANSION OR CONTRACTION (INCH/FOOT)										
-50	-58	0.000	-0.003	-0.005	-0.008	-0.011	-0.014	-0.016	-0.019	-0.022	-0.024	-0.027
-40	-40	0.003	0.000	-0.003	-0.005	-0.008	-0.011	-0.014	-0.016	-0.019	-0.022	-0.024
-30	-22	0.005	0.003	0.000	-0.003	-0.005	-0.008	-0.011	-0.014	-0.016	-0.019	-0.022
-20	-4	0.008	0.005	0.003	0.000	-0.003	-0.005	-0.008	-0.011	-0.014	-0.016	-0.019
-10	14	0.011	0.008	0.005	0.003	0.000	-0.003	-0.005	-0.008	-0.011	-0.014	-0.016
0	32	0.014	0.011	0.008	0.005	0.003	0.000	-0.003	-0.005	-0.008	-0.011	-0.014
10	50	0.016	0.014	0.011	0.008	0.005	0.003	0.000	-0.003	-0.005	-0.008	-0.011
20	68	0.019	0.016	0.014	0.011	0.008	0.005	0.003	0.000	-0.003	-0.005	-0.008
30	86	0.022	0.019	0.016	0.014	0.011	0.008	0.005	0.003	0.000	-0.003	-0.005
40	104	0.024	0.022	0.019	0.016	0.014	0.011	0.008	0.005	0.003	0.000	-0.003
50	122	0.027	0.024	0.022	0.019	0.016	0.014	0.011	0.008	0.005	0.003	0.000

TABLE 2 - METRIC

		AVERAGE TEMPERATURE AT TIME OF CUTTING & INSTALLATION										
	°C	-50	-40	-30	-20	-10	0	10	20	30	40	50
	°F	-58	-40	-22	-4	14	32	50	68	86	104	122
MIN/MAX POST CONSTRUCTION TEMP. °C	°F	EXPANSION OR CONTRACTION (MM/METER)										
-50	-58	0.000	-0.230	-0.460	-0.690	-0.920	-1.150	-1.380	-1.610	-1.840	-2.070	-2.300
-40	-40	0.230	0.000	-0.230	-0.460	-0.690	-0.920	-1.150	-1.380	-1.610	-1.840	-2.070
-30	-22	0.460	0.230	0.000	-0.230	-0.460	-0.690	-0.920	-1.150	-1.380	-1.610	-1.840
-20	-4	0.690	0.460	0.230	0.000	-0.230	-0.460	-0.690	-0.920	-1.150	-1.380	-1.610
-10	14	0.920	0.690	0.460	0.230	0.000	-0.230	-0.460	-0.690	-0.920	-1.150	-1.380
0	32	1.150	0.920	0.690	0.460	0.230	0.000	-0.230	-0.460	-0.690	-0.920	-1.150
10	50	1.380	1.150	0.920	0.690	0.460	0.230	0.000	-0.230	-0.460	-0.690	-0.920
20	68	1.610	1.380	1.150	0.920	0.690	0.460	0.230	0.000	-0.230	-0.460	-0.690
30	86	1.840	1.610	1.380	1.150	0.920	0.690	0.460	0.230	0.000	-0.230	-0.460
40	104	2.070	1.840	1.610	1.380	1.150	0.920	0.690	0.460	0.230	0.000	-0.230
50	122	2.300	2.070	1.840	1.610	1.380	1.150	0.920	0.690	0.460	0.230	0.000

Table 3 - Fastener to Structure

LONGBOARD®
INSPIRING ARCHITECTURE

v.1.1

FASTENER TO STRUCTURE SPACING - WIND LOAD

T&G PLANKS		PSF (Factored / Ultimate)										
		20	30	40	50	60	70	80	90	100	110	120
QUICK-SCREEN CLIP SPACING (IN)	16"											
	24"											
	32"											

Plank Profiles: V-Groove (2-1/2", 4", 6"), Smooth (6"), Channel (6"), Lap Siding (6"), Board & Batten Siding (7")

TRIM COMPONENTS*		PSF (Factored / Ultimate)										
		20	30	40	50	60	70	80	90	100	110	120
	16"											
Soffit direct to truss	24"											

*Starter Strip requires Two (2) installation anchors at each fastener location: 1 Quick-Screen Clip + 1 Mid-Point slotted hole

Calculations are using L/180 deflection limits

SUBSTRATE TYPE	SUBSTRATE REQUIREMENTS	ANCHOR DESCRIPTION	MIN. EMBEDMENT	MIN. EDGE DISTANCE
WOOD	Min. specific gravity = 0.55 wood	#10 Pan Head Screw	1-1/2"	3/4"
STEEL	Min. 18 ga., min. 33 ksi.	#10 Tek Screw (grade 5)	3 threads penetration past metal structure	1/2"
CONCRETE**	Min. 3000 psi	3/16" ITW Tapcon	1"	1"
MASONRY - CMU**	Grout-filled block per ASTM C-90, min. 2000 psi		1"	2"

**For Concrete and Masonry/CMU; Furring Strips are recommended, where possible

GENERAL NOTES:

1. Adequacy of the structural stud framing (wood and/or metal) and concrete/masonry as a main wind force resiting system capable of withstanding and transferring applied product loads to the foundation is the responsibilty of the engineer or architect of record for the project of installation.
2. Substrate shall be designed and anchored to properly transfer all loads to the structure buck design and installation is the responsibilty of the engineer or architect of record for the project of installation.
3. The installation details described herein are generic and may not reflect actual conditions for a specific site. If site conditions cause installation to deviate from the requirements detailed herein, a licensed engineer or architect shall prepare site specific documents for use with this document.
4. An unfactored dead load of 1.5 psf was assumed for the cladding.

INSTALLATION NOTES:

1. One (1) installation anchor is required at each Quick-Screen Clip location. Minimum of two (2) anchors per plank.
2. Spacing is from clip/fastener center to center.
3. The number of installation anchors per the table is the minimum number of anchors to be used for product installation.
4. Install individual installation anchors within a tolerance of +/- 1/2" of the specified spacings. Tolerances are not cumulative from one installation anchor to the next.
5. If fastening to every second stud, the attachment stud shall be staggered between adjacent runs of cladding.
6. Minimum embedment and edge distance exclude wall finishes, including but not limited to wood furrings, stucco, foam, brick veneer, sheathing and siding.
7. Installation anchors and associated hardware must be made of corrosion resistant material or have a corrosion resistant coating. Common fastener types can be equal or better to a & b listed below:
   a. Zinc plated fasteners for moderate climate zones
   b. 316 Stainless Steel fasteners for coastal climate zones
8. For CMU grout filled block, do not install installation anchors into mortar joints. Edge distance is measured from free edge of block or edge of mortar joint into face shell of block.
9. Installation anchors shall be installed in accordance with anchor manufacturer's installation instructions, and anchors shall not be used in substrates with strengths less than the minimum strength specified by the anchor manufacturer.

Table 4 - Fastener to Sheathing (2-1/2” Planks)

LONGBOARD®
INSPIRING ARCHITECTURE

V1.1

FASTENER TO WOOD SHEATHING SPACING - WIND LOAD

2-1/2" PLANKS		PSF (Factored / Ultimate)										
		20	30	40	50	60	70	80	90	100	110	120
QUICK-SCREEN CLIP SPACING (IN)	24"											
	32"											
Plank Profile: 2-1/2" V-Groove												

TRIM COMPONENTS*		PSF (Factored / Ultimate)										
		20	30	40	50	60	70	80	90	100	110	120
	16"											
*Starter Strip requires Two (2) installation anchors at each fastener location: 1 Quick-Screen Clip + 1 Mid-Point slotted hole												

Calculations are using L/60 deflection limits

SUBSTRATE TYPE	SUBSTRATE REQUIREMENTS	ANCHOR DESCRIPTION	MIN. SCREW LENGTH	MIN. EMBEDMENT	MIN. EDGE DISTANCE
7/16" OSB/PLYWOOD	APA rated sheathing or better	#10 Pan Head Wood Screw	1"	7/16"	1"

GENERAL NOTES:

1. Substrate shall be designed and anchored to properly transfer all loads to the structure buck design and installation is the responsibilty of the engineer or architect of record for the project of installation.
2. The installation details described herein are generic and may not reflect actual conditions for a specific site. If site conditions cause installation to deviate from the requirements detailed herein, a licensed engineer or architect shall prepare site specific documents for use with this document.
3. An unfactored dead load of 1.5 psf was assumed for the cladding.

INSTALLATION NOTES:

1. One (1) installation anchor is required at each Quick-Screen Clip location. Minimum of two (2) anchors per plank.
2. Spacing is from clip/fastener center to center.
3. The number of installation anchors per the table is the minimum number of anchors to be used for product installation.
4. Install individual installation anchors within a tolerance of +/- 1/2" of the specified spacings. Tolerances are not cumulative from one installation anchor to the next.
5. Installation anchors and associated hardware must be made of corrosion resistant material or have a corrosion resistant coating. Common fastener types can be equal or better to a & b listed below:
   a. Zinc plated fasteners for moderate climate zones
   b. 316 Stainless Steel fasteners for coastal climate zones
6. Installation anchors shall be installed in accordance with anchor manufacturer's installation instructions, and anchors shall not be used in substrates with strengths less than the minimum strength specified by the anchor manufacturer.

REFERENCED DATA:

2023 Florida Building Code

2018 National Design Specification for Wood Construction

Fastener Loads for Plywood - Screws (2011 APA - Engineered Wood Association)

Table 5 - Fastener to Sheathing (4” Planks)

LONGBOARD®
INSPIRING ARCHITECTURE

V.1.1

FASTENER TO WOOD SHEATHING SPACING - WIND LOAD

4" PLANKS		PSF (Factored / Ultimate)										
		20	30	40	50	60	70	80	90	100	110	120
QUICK-SCREEN CLIP SPACING (IN)	16"											
	24"											
	32"											

Plank Profile: 4" V-Groove

TRIM COMPONENTS*		PSF (Factored / Ultimate)										
		20	30	40	50	60	70	80	90	100	110	120
	16"											

*Starter Strip requires Two (2) installation anchors at each fastener location: 1 Quick-Screen Clip + 1 Mid-Point slotted hole

Calculations are using L/60 deflection limits

SUBSTRATE TYPE	SUBSTRATE REQUIREMENTS	ANCHOR DESCRIPTION	MIN. SCREW LENGTH	MIN. EMBEDMENT	MIN. EDGE DISTANCE
7/16" OSB/PLYWOOD	APA rated sheathing or better	#10 Pan Head Wood Screw	1"	7/16"	1"

GENERAL NOTES:

1. Substrate shall be designed and anchored to properly transfer all loads to the structure buck design and installation is the responsibilty of the engineer or architect of record for the project of installation.
2. The installation details described herein are generic and may not reflect actual conditions for a specific site. If site conditions cause installation to deviate from the requirements detailed herein, a licensed engineer or architect shall prepare site specific documents for use with this document.
3. An unfactored dead load of 1.5 psf was assumed for the cladding.

INSTALLATION NOTES:

1. One (1) installation anchor is required at each Quick-Screen Clip location. Minimum of two (2) anchors per plank.
2. Spacing is from clip/fastener center to center.
3. The number of installation anchors per the table is the minimum number of anchors to be used for product installation.
4. Install individual installation anchors within a tolerance of +/- 1/2" of the specified spacings. Tolerances are not cumulative from one installation anchor to the next.
5. Installation anchors and associated hardware must be made of corrosion resistant material or have a corrosion resistant coating. Common fastener types can be equal or better to a & b listed below:
   a. Zinc plated fasteners for moderate climate zones
   b. 316 Stainless Steel fasteners for coastal climate zones
6. Installation anchors shall be installed in accordance with anchor manufacturer's installation instructions, and anchors shall not be used in substrates with strengths less than the minimum strength specified by the anchor manufacturer.

REFERENCED DATA:

2023 Florida Building Code

2018 National Design Specification for Wood Construction

Fastener Loads for Plywood - Screws (2011 APA - Engineered Wood Association)

Table 6 - Fastener to Sheathing (6” Planks)

LONGBOARD®
INSPIRING ARCHITECTURE

V.1.1

FASTENER TO WOOD SHEATHING SPACING - WIND LOAD

6" Planks, 6" Lap Siding, 7" Board & Batten		PSF (Factored / Ultimate)										
		20	30	40	50	60	70	80	90	100	110	120
QUICK-SCREEN CLIP SPACING (IN)	12"											
	16"											
	24"											
	32"											

Plank Profiles: 6" V-Groove, 6" Smooth, 6" Channel, 6" Lap, 7" Board & Batten

TRIM COMPONENTS*		PSF (Factored / Ultimate)										
		20	30	40	50	60	70	80	90	100	110	120
	16"											

*Starter Strip requires Two (2) installation anchors at each fastener location: 1 Quick-Screen Clip + 1 Mid-Point slotted hole

Calculations are using L/60 deflection limits

SUBSTRATE TYPE	SUBSTRATE REQUIREMENTS	ANCHOR DESCRIPTION	MIN. SCREW LENGTH	MIN. EMBEDMENT	MIN. EDGE DISTANCE
7/16" OSB/PLYWOOD	APA rated sheathing or better	#10 Pan Head Wood Screw	1"	7/16"	1"

GENERAL NOTES:

1. Substrate shall be designed and anchored to properly transfer all loads to the structure buck design and installation is the responsibilty of the engineer or architect of record for the project of installation.
2. The installation details described herein are generic and may not reflect actual conditions for a specific site. If site conditions cause installation to deviate from the requirements detailed herein, a licensed engineer or architect shall prepare site specific documents for use with this document.
3. An unfactored dead load of 1.5 psf was assumed for the cladding.

INSTALLATION NOTES:

1. One (1) installation anchor is required at each Quick-Screen Clip location. Minimum of two (2) anchors per plank.
2. Spacing is from clip/fastener center to center.
3. The number of installation anchors per the table is the minimum number of anchors to be used for product installation.
4. Install individual installation anchors within a tolerance of +/- 1/2" of the specified spacings. Tolerances are not cumulative from one installation anchor to the next.
5. Installation anchors and associated hardware must be made of corrosion resistant material or have a corrosion resistant coating. Common fastener types can be equal or better to a & b listed below:
   a. Zinc plated fasteners for moderate climate zones
   b. 316 Stainless Steel fasteners for coastal climate zones
6. Installation anchors shall be installed in accordance with anchor manufacturer's installation instructions, and anchors shall not be used in substrates with strengths less than the minimum strength specified by the anchor manufacturer.

REFERENCED DATA:

2023 Florida Building Code

2018 National Design Specification for Wood Construction

Fastener Loads for Plywood - Screws (2011 APA - Engineered Wood Association)

LONGBOARD®
INSPIRING ARCHITECTURE

Radius Table

APPLICATION	A -Circular	B -Curved walls	C -Convex	D -Concave
DIAGRAMS	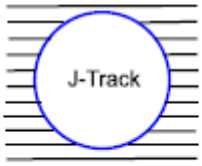	Termination Set 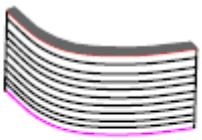 *Starter	J-Track 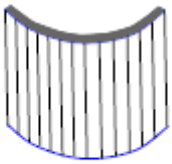 J-Track	J-Track 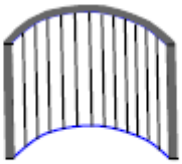 J-Track
TRIMS	**Minimum Radius**			
Non-Tempered Precision J-Track (5/8")	**1.5' (0.46m)**	N/A	**1.5' (0.46m)**	**2' (0.61m)**
Precision J-Track (5/8")	15' (4.57m)	N/A	N/A	N/A
Precision Two-Piece J-Track w. J-base	15' (4.57m)	N/A	8' (2.44m)	8' (2.44m)
Precision Termination Set	N/A	12' (4.57m)	N/A	N/A
Non-Tempered Craftsman J-Track (7/8")	**6' (1.83m)**	N/A	**6' (1.83m)**	**6' (1.83m)**
Craftsman J-Track (7/8")	38' (11.6m)	N/A	20' (6.1m)	20' (6.1m)
Craftsman Two-Piece J-Track w. J-Base	20' (6.1m)	N/A	8' (2.44m)	8' (2.44m)
Craftsman Termination Set	N/A	12' (4.57m)	N/A	N/A
Traditional Two-Piece J-Track w. J-base	38' (11.6m)	N/A	8' (2.44m)	8' (2.44m)
Traditional Termination Set	N/A	12' (4.57m)	N/A	N/A
PLANKS	**Minimum Radius**			
2 1/2" V-Groove	N/A	12' (4.57m)	**1.5' (0.46m)**	**2' (0.61m)**
2 1/2" V-Groove Perforated	N/A	12' (4.57m)	**1.5' (0.46m)**	**2' (0.61m)**
4" V-Groove	N/A	12' (4.57m)	3' (0.91m)	6' (1.83m)
6" V-Groove	N/A	12' (4.57m)	3' (0.91m)	6' (1.83m)
6" Channel	N/A	12' (4.57m)	3' (0.91m)	6' (1.83m)
6" Smooth Plank	N/A	12' (4.57m)	3' (0.91m)	6' (1.83m)
6" V-Groove Perforated	N/A	12' (4.57m)	3' (0.91m)	6' (1.83m)
6" Smooth Plank Perforated	N/A	12' (4.57m)	3' (0.91m)	6' (1.83m)
4" Castellation	N/A	12' (4.57m)	3' (0.91m)	6' (1.83m)
8" Castellation	N/A	12' (4.57m)		
6" Triple Bevel	N/A	19' (5.8m)	3' (0.91m)	6' (1.83m)
8" V-Groove	N/A	12' (4.57m)		

Note 1: When considering tight radii bends, use Non-Tempered Trim components for the minimum radius.

Note 2: When bending and securing components, bend against solid secure object and take care not to over bend.

*Note 3: Starter Strip meets or exceeds the performance of all the listed application and limitations.

Proper Handling of Longboard Products

To help avoid injury and product damage, Longboard products require proper handling to and from storage areas during installation. When carrying or installing any products it is recommended that they be moved or carried by at least two people with each support point approximately 4ft from the ends. **Carrying products without proper support can cause excessive bending which may damage the appearance or finish of the product.** Any short cut lengths should also be carried on edge while supporting the material. See below for details.

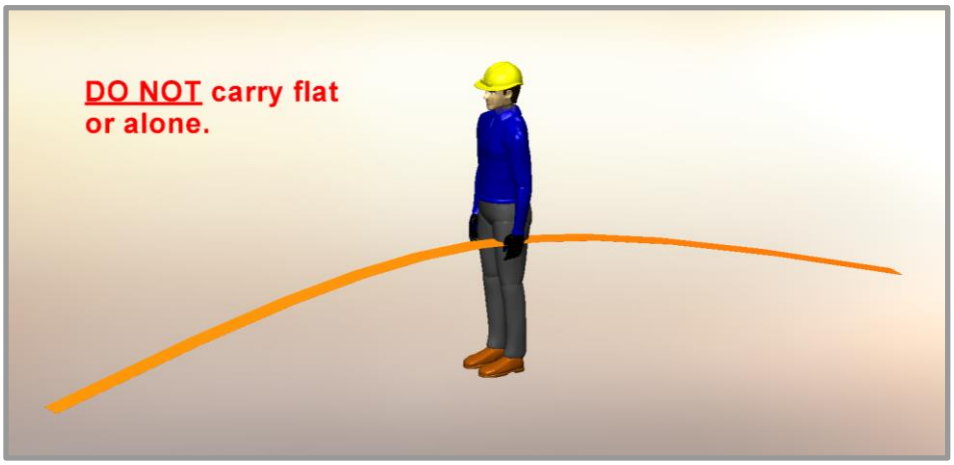

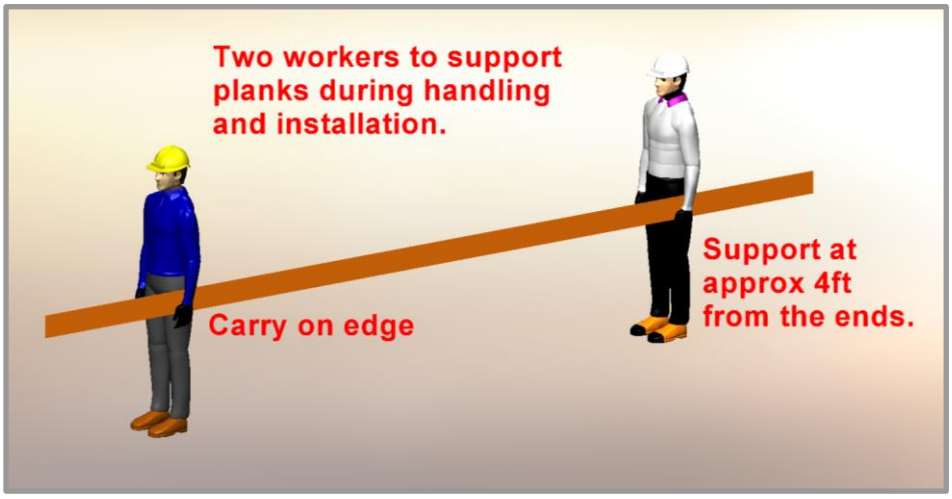

⚠ Delivery, Storage & Handling ⚠

- Always inspect the delivery for damage and contact LB ASAP if there are any issues: info@longboardproducts.com or 1-800-604-0343 and include your PO# and any pictures if possible. Longboard is not responsible for the installation of blemished or damaged material.
- Be sure to store the material flat, keep it dry, safe & secure and remain in unopened cartons until ready to be installed.
- Always wear appropriate PPE when handling products.

BLANK PAGE

Longboard Architectural Products Inc.
© Longboard Architectural Products Inc. All rights reserved.

Longboard® is a registered trademark of Longboard Architectural Products Inc.

Longboard
1777 Clearbrook Road
Abbotsford, BC V2T 8X8
Canada
longboardproducts.com

Every effort has been made to ensure that the information in these installation guidelines are accurate. Longboard is not responsible for printing or clerical errors.

For more information, contact client care at info@longboardproducts.com or call toll free 1-800-604-0343.