TONGUE & GROOVE
INTERIOR WALL SYSTEM

TYPICAL ISOMETRIC

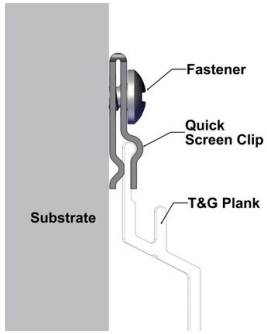

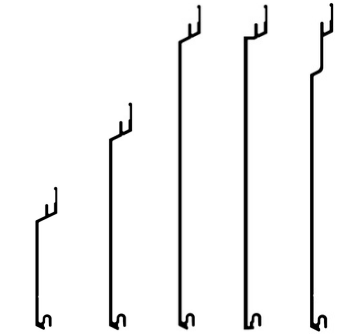

PROFILES
V-Groove: 2-1/2", 4", 6"
Smooth: 6"
Channel: 6"
Standard Lengths: 24', 2-1/2"(12')
96 SQ FT/box

COMPONENTS - Standard Lengths: 12'

Traditional: Starter Strip, Back-to Back Starter Strip, 2" Corner Set, 1-3/8" Two Piece J-Track, 1-3/8" Termination Set, Compression Joint (24'), 1-1/2" Flat Reveal Set, 1-1/2" U-Reveal Set, 1-1/2" T&G U-Reveal, 2" Offset Flat Reveal

Craftsman: 7/8" J-Track, 3/4" Inside Corner, 1" Outside Corner, 3/4" U-Reveal Set, 3/4" T&G U-Reveal

Precision: 5/8" Starter J-Track, 3/16" Outside Corner, 5/8" J-Track, 5/8" Two Piece J-Track, 5/8" Termination Set, 1/2" Flat Reveal, 1/2" T&G Flat Reveal

T&G_W_IS_RD_V5

FINISHES
Woodgrains, solid color, naturally aged metal, custom solid color matching (additional lead times apply)

ATTACHMENT
Planks: Quick-screen clips w. #10 Pan Head screws* @ 32" o.c. (standard).
- Quick-screen Clips: Included in order for 32" o.c. spacings, purchase extra for 16" o.c. spacings. For purchase (extra): 100 pcs/Bag, 1500 pcs/Box

Trims: Hard fasten w. #10 Pan Head screws* @ 16" o.c. *Screws not included.

BIM & CAD
RVT & DWG files available, see website for details

LONGBOARD®
INSPIRING ARCHITECTURE

info@longboardproducts.com
longboardproducts.com
800 604 0343

TECHNICAL SPECIFICATIONS

PHYSICAL DATA
6063-T5 Extruded Aluminum
100% Recyclable
Warranty: Finish:15 year (standard)/20 year* (ultra) (*10 week lead time);
Aluminum: 50 year
Weight (lbs/sqft): ~1.5
2-1/2" Perforated Planks provide 15% open area
6" Perforated Planks provide 21% open area

NRC/SAA	NRC	SAA
• 2 1/2" Perforated Planks w. 1" fiberglass insulation (3lbs/ft3 density)	0.70	0.72
• 6" Perforated Planks w. 1" fiberglass insulation (3lbs/ft3 density)	0.70	0.70
• 6" Perforated Planks w. SoundTex scrim	0.75	0.75
• 6" Perforated Planks w. 2" fiberglass insulation (3lbs/ft3 density)	0.95	0.96

TESTING

ICC-ESR 4182 Evaluation Report - Division: 07 00 00 Thermal and Moisture Protection Section: 07 46 00 - Siding

LARR - Los Angeles Department of Building Safety (LADBS) accepts ICC-ES reports as proof of compliance

Impact testing: TAS 201

Fire Rating: Class A Non-Combustible by ASTM E136 & ASTM E84 ; A2-s1,d0 by EN 13501-1

Light Reflectance: 5% (Black) up to 73.2% (Ultra White)

LONGBOARD®
INSPIRING ARCHITECTURE

Interior

Tongue and Groove Walls

Installation Guidelines

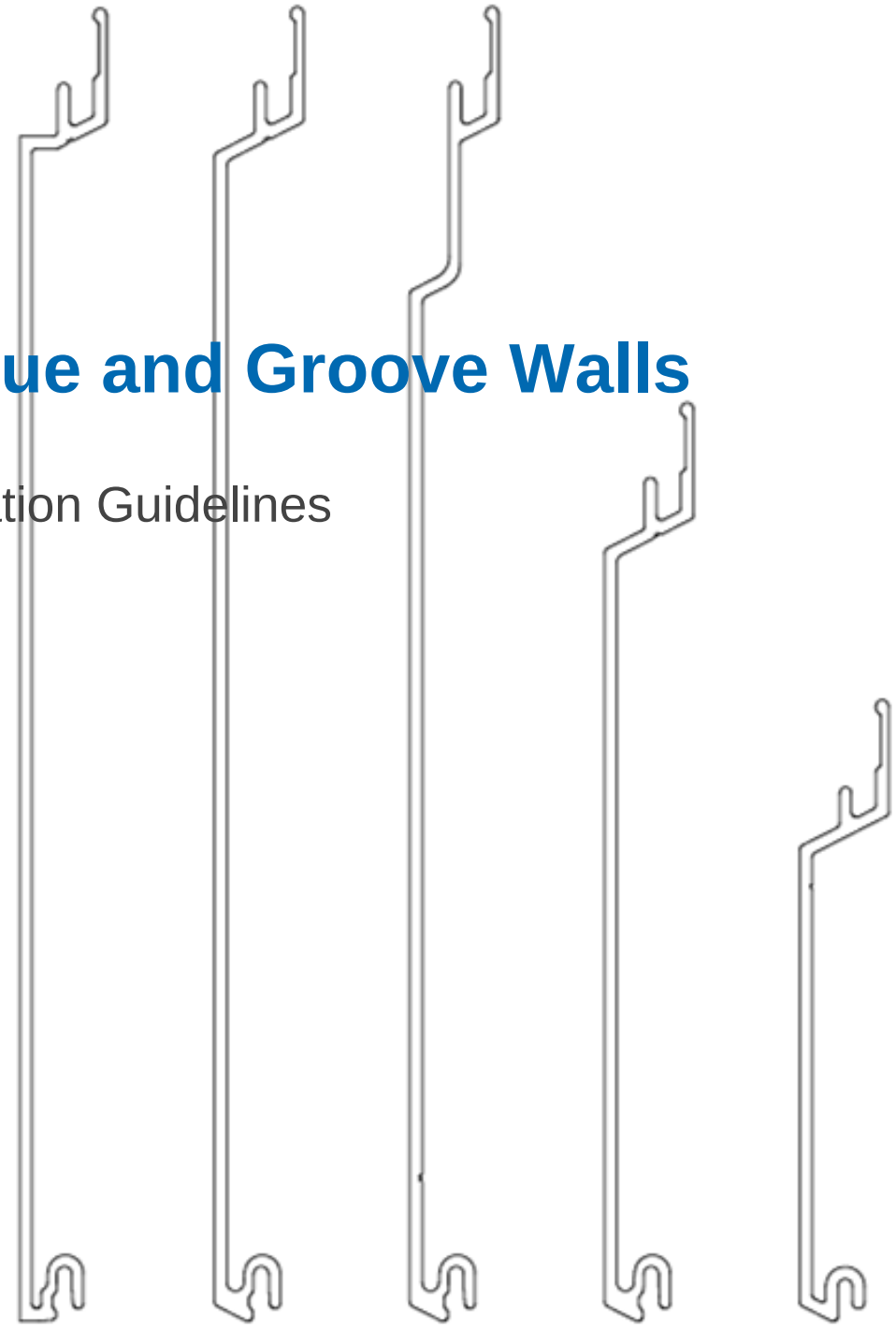

Table of Contents

Material Specifications 3
- Finishes 3
- Material ordering and deliveries 3
- Storage and handling 3
- Cleaning Recommendations 3
- Warranty 3
- Graffiti Removal 4

Components 5
- Components (Typical) 5

Tools/Cutting/Fastening 6
- Tools 6
- Cutting 6
- Fastening/Fastener types 7
- Framing/Furring requirements 7
- Fastening options onto exterior insulation 8

Expansion and Contraction 9

System Install 10
- Perimeter area and field limitations 10
- Component layout 11
  - Corners 11
  - J-Track, Two-piece J-Track 11
  - Starter Strip, Back-to Back Starter 11
  - Reveal Sets 11
  - Compression Joint 11
  - Termination Set 11
  - Offset Flat Reveal 11
- Install Steps 12
  - Horizontal Cladding 12-16
  - Vertical Cladding 17-21
  - Final Steps 22
- Details 23
  - Single Butt-Joints 23-24
  - Multiple Floating Butt-Joints 25
  - Floor elevations Compression Joint 26
  - Floor elevations Through wall flashing 26
  - Expansion reveals 27

Appendix 28
- Tables 1&2 - Expansion & contraction 28
- Tables 3 – Fastening to Structure 29
- Tables 4-6 – Fastening to Sheathing 30-32
- Radius Table 33
- Handling and care of products 34
- Blank Page 35
- Contact Info 36

Material Specifications

Finishes

- Longboard Products are available in a wide range of powder coated finishes.
- Custom solid colors are available upon request.
- Longboard woodgrains have a repeat pattern, shipped in sets mated back-to-back in each box. Install these as they come out of the box, as an A&B pattern staggering each plank approx. 1-2' (305-610mm) from the previous plank to achieve a random pattern aesthetic. It is recommended to create an onsite mock-up to produce a suitable pattern.
- Longboard Products are not recommended for use on marine applications in direct contact with salt wate

Longboard extruded products are produced 1" (25mm) oversized, as one end is drilled for the coating process, and both ends have 1/2" (12mm) of masking tape (woodgrains only) which must be cut off for best results.

Material Ordering & Delivery

• Packaging:	Planks are sold in box quantities: 6" Planks: 96 SQ FT/Box (8/24's, 192LF) w. 90pcs Quick-Screen Clips included 4" V-Groove: 96 SQ FT/Box (12/24's, 288 LF) w. 144 Quick-Screen Clips included 2 1/2" V-Groove: 20 SQ FT/Box (8/12's, 96 LF) w. 45 Quick-Screen Clips included Trim Components are sold individually by the 12' (3.7m) length.
• Shipping:	Most Popular Finishes -ready to ship within 1 week Additional Finishes -ready to ship within 14 weeks Delivered on 24' (7.3m) long skids weighing up to 2000 lbs. A mechanical lift with forks is required on site to receive the order.
• QC:	Always inspect the delivery for damage and contact LB ASAP if there are any issues: info@longboardproducts.com or 1-800-604-0343 and include your PO# and any pictures if possible. Mark the delivery receipt as "damaged" and accept the delivery as-is. Longboard is not responsible for the installation of blemished or damaged material.

Storage & Handling

Be sure to store the material flat, keep it dry, safe & secure and remain in unopened cartons until ready to be installed. **See Appendix for proper handling and care instructions.**

Cleaning Recommendations

- Initial and periodic cleaning for best looking product
- Basic methods use a combination of moderate water pressure, soft sponge/brush and a mild detergent (Safe for your hands, safe for the product)

⚠ NEVER use aggressive acid or alkaline cleaners on Longboard finishes. Do not use cleaners containing Trisodium Phosphate, Phosphoric Acid, Hydrochloric Acid, Hydrofluoric Acid, Fluorides, or any other compound that is known to react with metal.

See Cleaning Guide for full requirements & cleaning schedule:
longboardproducts/resources/care-maintenance.com

Warranty

Upon substantial completion of the project, register for warranty online here: longboardproducts.com/warranty

⚠ Registration is required for the warranty to be in effect.

Graffiti Removal

Standard Woodgrain

Use Standard soap & water only

D2000 Solid Color

	Prosoco Cleaner	MEK Solvent
Permanent Marker	✓	✓
Oil Based Spray Paint	✓	✓
Water Based Spray Paint	✓	✓
Adhesive Tape	✓	✓

MEK Solvent

Prosoco Anti-Graffiti Cleaner

SPECIAL ORDER - EXT. LEAD TIMES CONTACT LB

Anti-Graffiti High Gloss Woodgrain

	MEK Solvent
Permanent Marker	✓
Oil Based Spray Paint	✓
Water Based Spray Paint	✓
Adhesive Tape	✓

MEK Solvent

Note: Cleaning the surface with a cleanser that is not diluted as per instructions, may result in damage to the coating.

Components

Components (Typical)

T&G Walls system consists of many components used in conjunction with each other to create a seamless look. For all LB components go to longboardproducts.com.

V-Groove Planks

* 48 sq. ft. box quantities ‡ 96 sq. ft. box quantities

Size	12' *	24' ‡	12' Perf *	24' Perf ‡
2½"	3V.145	-	3VP.145	-
4"	4V.145	4V.289	-	-
6"	6V.145	6V.289	6VP.145	6VP.289

Butt-Joint Fastening Kit

Smooth Planks

Size	12' *	24' ‡	12' Perf *	24' Perf ‡
6"	6PSP.145	6PSP.289	6PSPP.145	6PSPP.289

Quick-Screen Clip

Channel Planks

Size	12' *	24' ‡
6"	6CH.145	6CH.289

Accessories

Product	Qty	SKU
Quick Screen Clips	1750, box	CLIP.N1750
Quick Screen Clips	100, bag	CLIP.N100
1/16" U-SHIM	250, bag	SHIM.1001
Butt- Joint Fastening Kit (6")	20 kits, bag	TGBJKIT
Touch Up Pens *Reach out to confirm color with account manager.*	N/A	TUP

Trim Components

Type	Style	Product	Dimensions	SKU
Starter	Precision	Starter J-Track	(5/8") - 12'	1SJT.145
Starter	Traditional	Starter Strip	(1-7/8") - 12'	2SS.145
Starter	Traditional	Back-to-Back Starter Strip	(1-1/4")	2BTBSS.145
J-Track	Precision	Two Piece J-Track	(5/8") - 12'	1X1JT.145
J-Track	Precision	J-Track	(5/8") - 12'	1JT.145
J-Track	Craftsman	J-Track	(7/8") - 12'	JT23.145
J-Track	Craftsman	Two Piece J-Track	(7/8") - 12'	JT23S.145
J-Track	Traditional	Two Piece J-Track	(1-3/8") - 12'	1X2JT.145
Corner	Precision	Outside Corner	(3/16") - 12'	05OC.145
Corner	Craftsman	Inside Corner	(3/4") - 12'	1IC.145
Corner	Craftsman	Outside Corner	(1") - 12'	1OC.145
Corner	Traditional	Corner Set	(2") - 12'	2CORS.145
Corner	Traditional	3" Smooth	(3") - 24'	3SCP.289
Corner	Traditional	3" V-Groove	(3") - 24'	3SVP.289
Reveal	Precision	Flat Reveal	(1/2") - 12'	1FR.145
Reveal	Precision	T&G Flat Reveal	(1/2") - 24'	1TGFR.289
Reveal	Craftsman	U-Reveal Set	(3/4") - 12'	1URS.145
Reveal	Craftsman	T&G U-Reveal	(3/4) - 24'	1TGURK.289
Reveal	Traditional	U-Reveal Set	(1-1/2") - 12'	2URS.145
Reveal	Traditional	Flat Reveal Set	(1-1/2") - 12'	2FRS.145
Reveal	Traditional	T&G U-Reveal	(1 1/2") - 24'	2TGURK.289
Reveal	Traditional	Offset Flat Reveal Set, J-Track Base	(2") - 12'	2OFFJ.145
Reveal	Traditional	Offset Flat Reveal Set, Termination Base	(2") - 12'	2OFFT.145
Termination	Precision	Termination Set	(5/8") - 12'	1TS.145
Termination	Craftsman	Termination Set	(7/8") - 12'	TS23S.145
Termination	Traditional	Termination Set	(1-3/8") - 12'	2TS.145
Compression Joints	Traditional	Compression Joint	(1-3/8") - 24'	2CJ.289

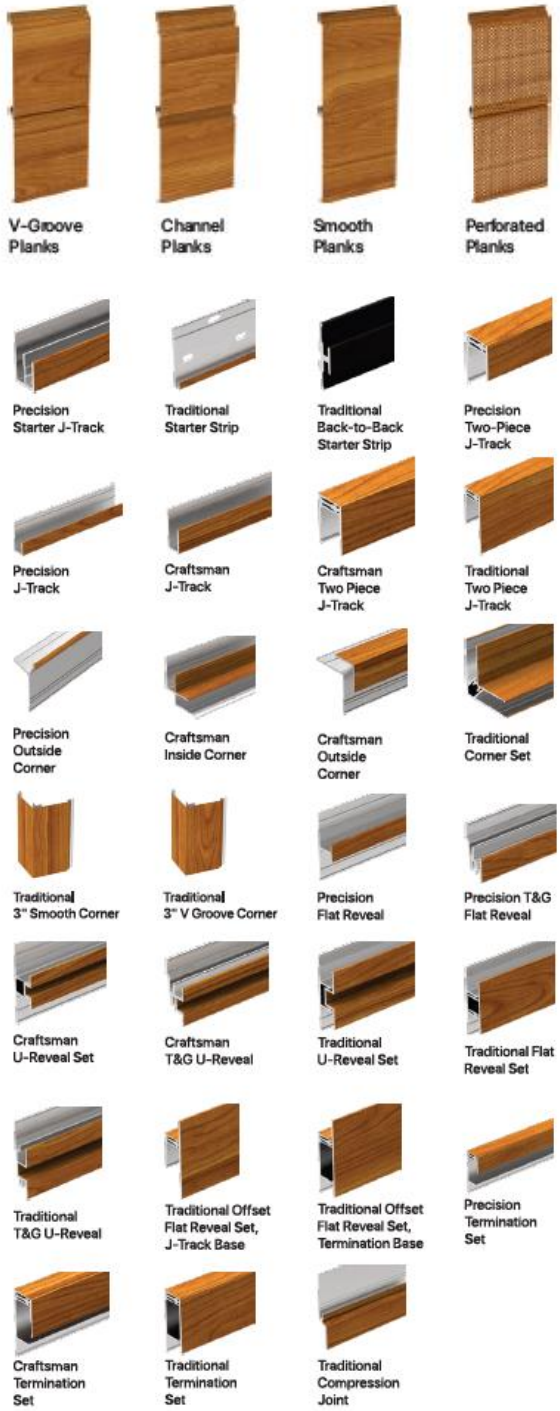

Tools/Cutting/Fastening

Tools

Commonly used tools for T&G Walls install.

	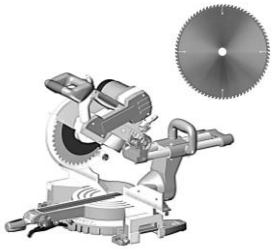		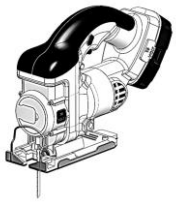
Table Saw with Carbide Metal Blade Non-ferrous 60-80T (for cutting aluminum)	Miter Saw with Carbide Metal Blade Non-ferrous 60-80T (for cutting aluminum)	Cordless Drill with clutch	Jig Saw (for protrusions)
	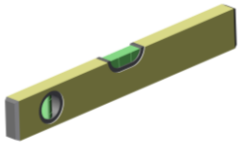		*Length, thread and point to suit substrate
Rubber Mallet (or Hammer)	Level	Hole Saw (for lighting fixtures)	#10 Pan Head Screws (by others)

Cutting

⚠ Always be sure to wear appropriate PPE: eye & hearing protection.

Cut planks using a Miter Saw and Table Saw, always allowing for expansion & contraction. Trim the taped/drilled ends of all stock length material by at least **1/2“ (12mm) each end** and discard.

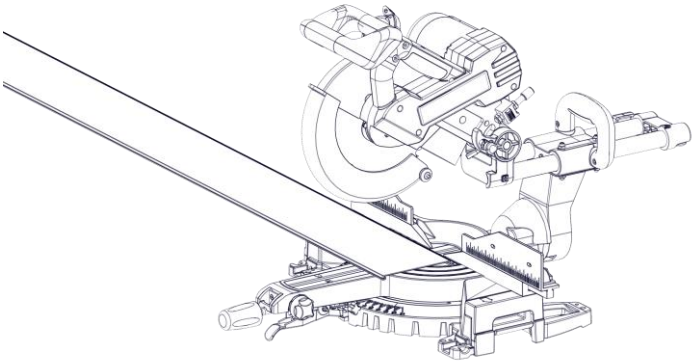

⚠ DO NOT Install Planks or Trims without trimming the ends.

Fastening

⚠ Always consult the project engineer, architect or authority having jurisdiction to understand the project specific fastening requirements.

Typical spacing:
-using **#10 Fasteners** (by others)

Trim components including Starter Strip

- **16" (406mm) O.C.**

Planks
Standard

- **32" (813mm) O.C.**
  (Quick-Screen Clips included with order for this spacing)

Higher PSF loads

- **16" (406mm) O.C.**
  (Add extra Quick-Screen Clips to order)

See **Appendix for fastening specs:**
Fastening to Structure -Table 3
Fastening to Sheathing Tables 4-6

Framing/Furring requirements
Always consult the local building authority and follow local building code requirements.
When attaching to **Hitch Cladding attachment System** refer to Hitch Install Guide for requirements.
See **Appendix for framing/furring/sheathing specs: Tables 3-6**

Fastener types

RECOMMENDED

*Length, thread and point to suit substrate

CORRECT

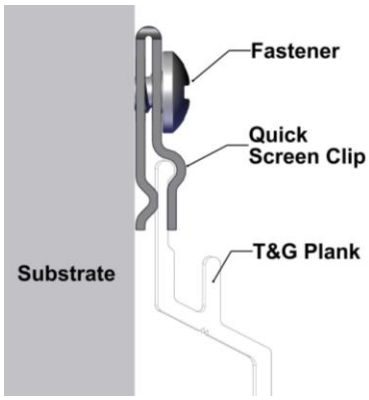

DO NOT USE

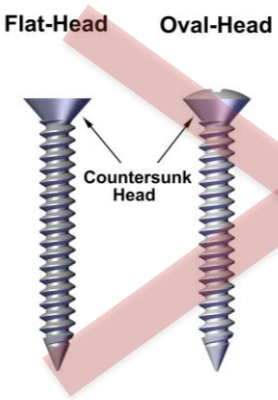

INCORRECT

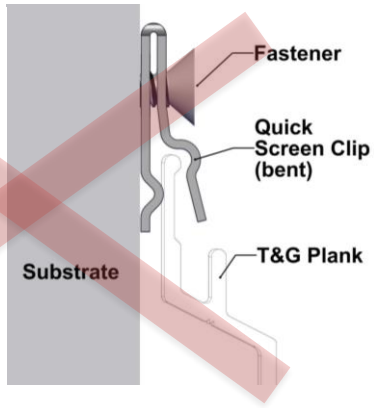

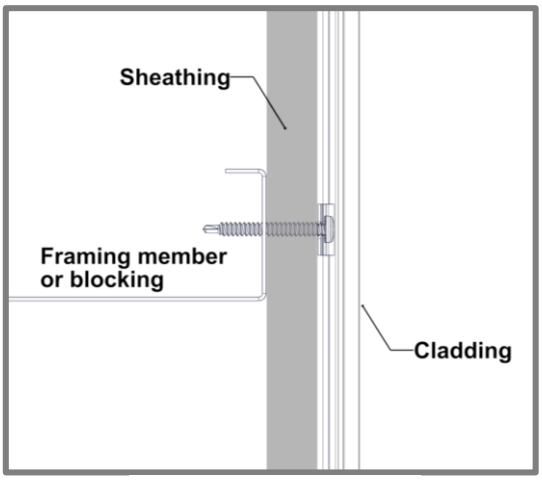

Fastening to Structure
(see Table 3 for specs)

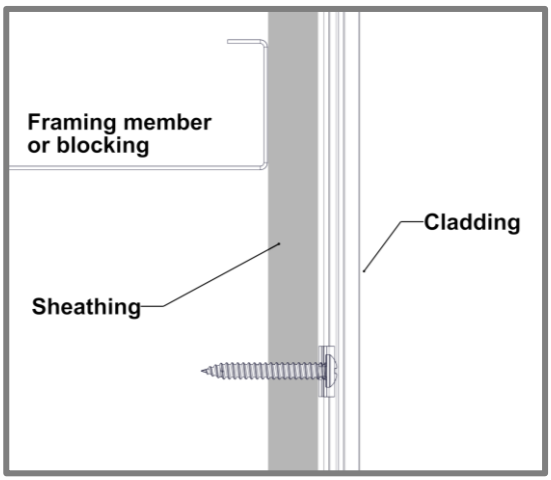

Fastening to Sheathing
(see Tables 4-6 for specs)

Fastening options onto exterior insulation or existing materials

*Never direct to insulation. Must be secured directly to solid secure substrate.

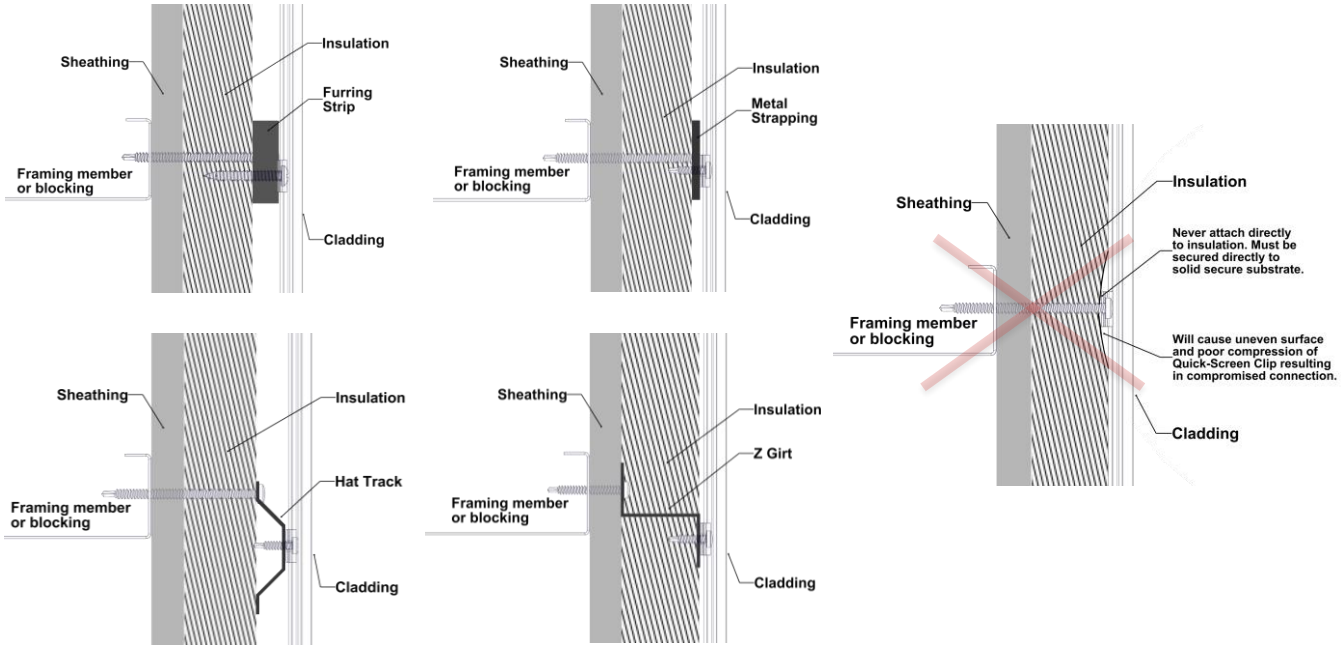

Expansion & Contraction

While selecting component and layout options, the project design team needs to calculate their expansion and contraction amounts. **See: Appendix for tables of expansion/contraction calculations per foot/meter.** Planks & components expand & contract 1/4” (6mm) over 24’ (7.3m), measured over a 30℃ (54℉) temperature range. Due to this range of movement, the following expansion components should be installed. See pages 25 & 26.

Horizontal Install

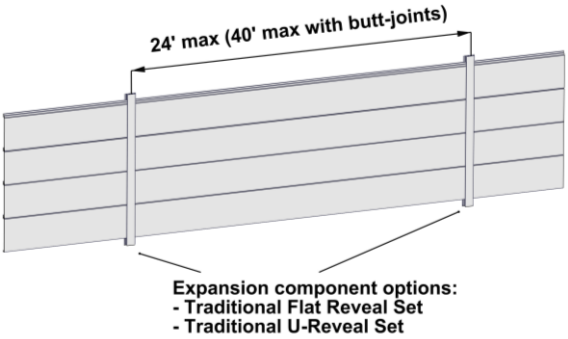

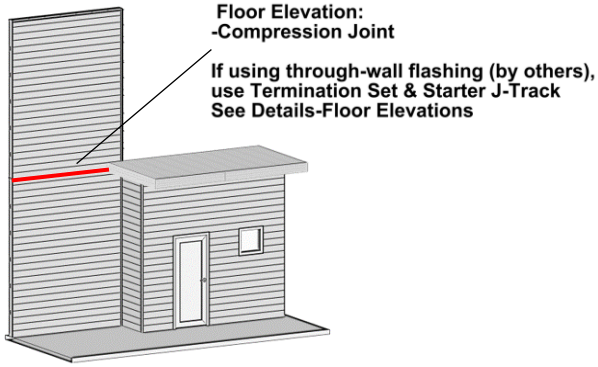

Vertical Install

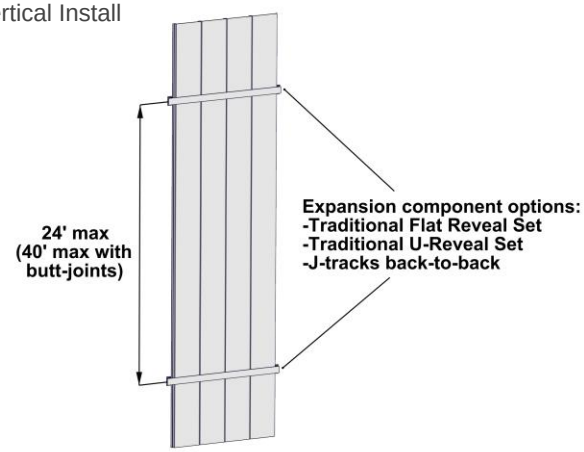

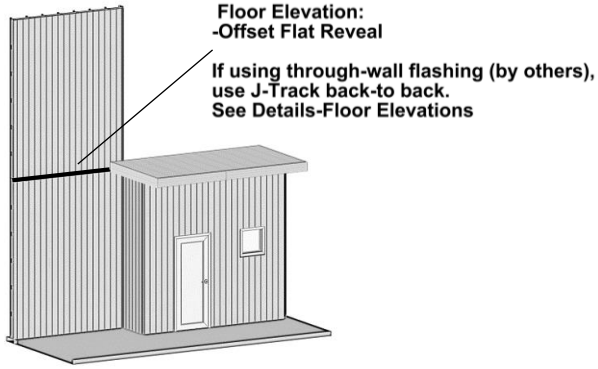

When using expansion components, each plank must terminate into a minimum of one (1) component.

⚠ TIP: To achieve expansion/contraction allowance, it is best practice to measure & mark for the adjustment of planks.

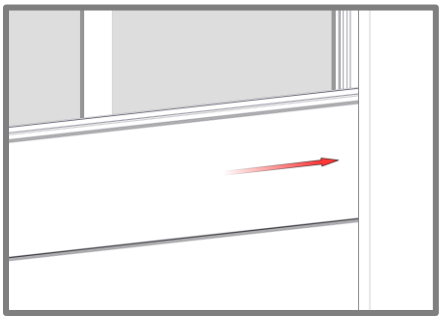

1. Slide Plank into trim component.

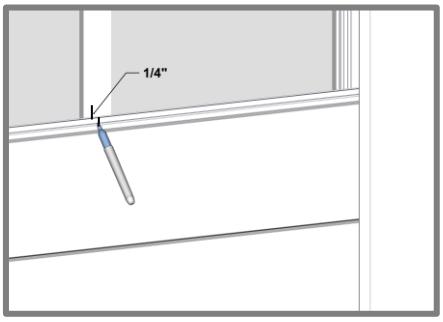

2. Measure 1/4” & mark for positioning.

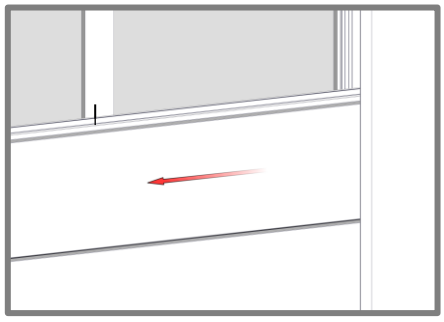

3. Slide Plank back 1/4" & align with mark.

Perimeter and field area limitations

- Measure and layout your wall area to consider plank & component alignment with fixtures, penetrations, and adjacent walls, for desired appearance. Consider using butt-joints along runs to minimize waste.
  Apply the same methodology for vertical installations.
- Longboard system typical dimensions:

Planks width	- 2 1/2” (64mm), 4” (102mm), 6” (152mm)
Perforated Planks width	- 2 1/2” (64mm), 6” (152mm)
Planks and Quick-Screen Clips depth	- 9/16” (14mm)
Trim Components depth	- 5/8” (15mm)

Seamless runs up to 24’ length planks (no butt-joints)

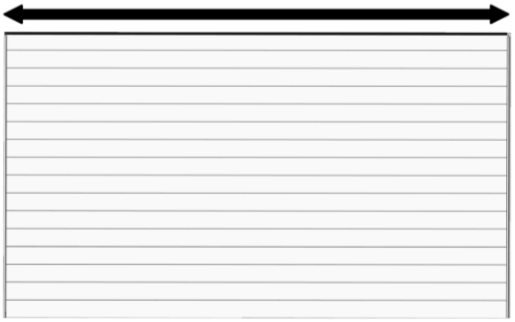

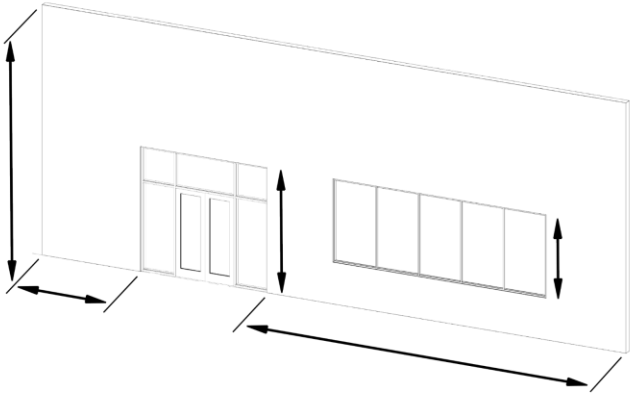

Runs up to 40’ length with staggered butt-joints

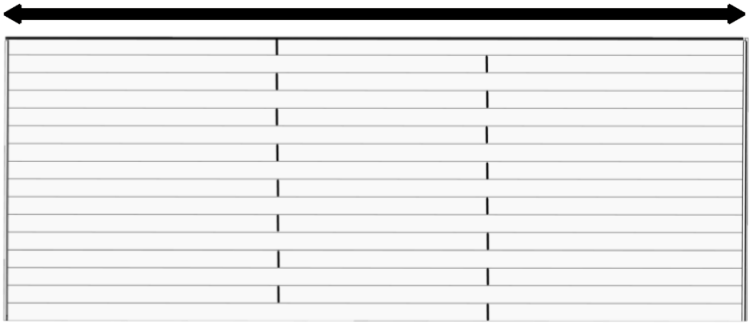

Runs greater than 40’ length, use a Reveal set to divide field area

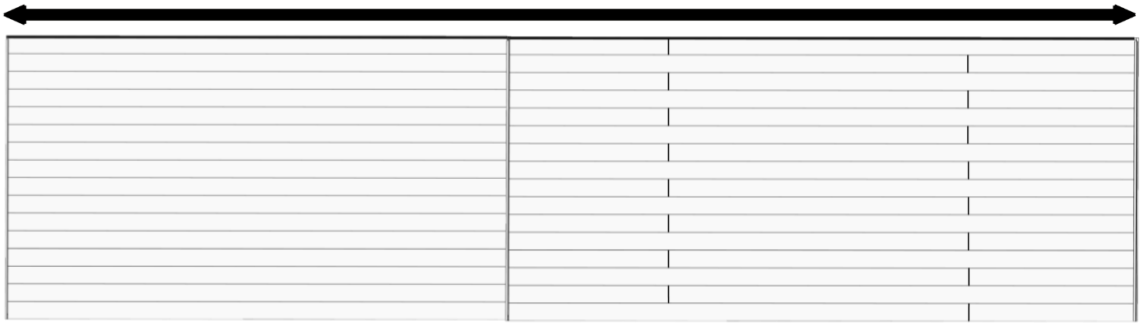

Component Layout

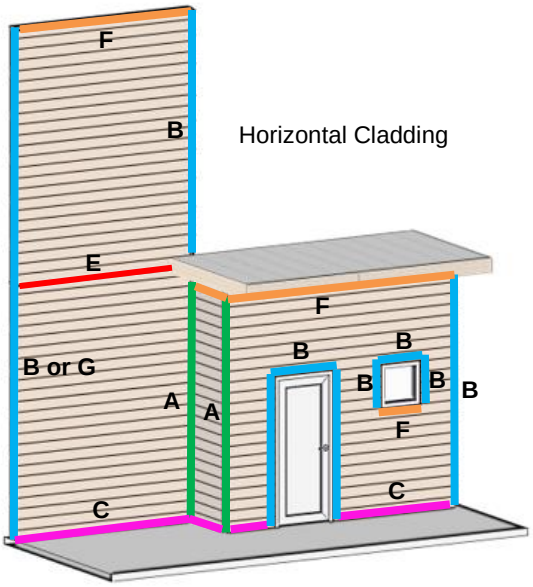

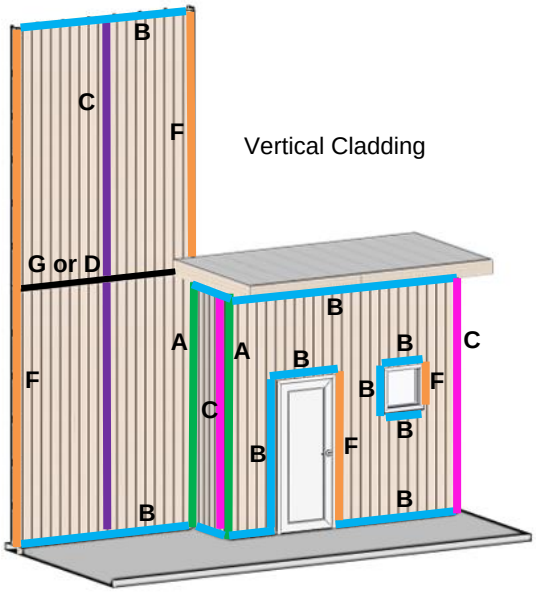

A **Corner Set 2”, Outside Corner 1”, Inside Corner 3/4"**

Location: Inside & outside corners of the installation area.

Details: Corner Set 2” recommended for vertical cladding installs.

B **J-Track (5/8”, 7/8”), Two Piece J-Track (5/8”, 7/8”, 1-3/8”)**

Location: Perpendicular to Planks (eg: sides of windows and doors), along gable end walls, other angled conditions, window/door headers and other penetrations.

Details: Notch the flange at the ends where they meet corner components.

C **Starter Strip, Starter J-Track 5/8”, Back-to-Back Starter Strip**

Location: Where starting with a full width Plank, typically along the bottom of the install for horizontal Planks.

Details: Alternatively, **Back-to-Back Starter Strip** can be used for vertical installs at the center of each cladding area for equal width ends.

D **Flat Reveal Set 1-1/2", U-Reveal Set 1-1/2"**

Location: Perpendicular to Planks, used to set plank widths.

Details: Two-piece component (cap & base). Precision Flat Reveal (one piece) 6’ 8” max span of planks

E **Compression Joint 1-3/8”**

Location: Parallel to Planks at floor elevations, (horizontal cladding).

Details: Used for expansion/contraction and settling/building movement at floor elevations.

F **Termination Set (5/8”, 7/8”, 1-3/8”)**

Location: Parallel to Planks along top of wall, underside of windows (horizontal cladding only), sides of windows/doors (vertical cladding only) and other penetrations.

Details: Install base only to start and end cap once planks are installed.

G **Offset Flat Reveal 2”**

Location: Perpendicular to Planks at floor elevations, (vertical cladding). For pre-fab wall construction, bridging the gap between adjacent wall panels.

Details: Used for expansion/contraction and settling/building movement at floor elevations.

Install Steps - Horizontal cladding

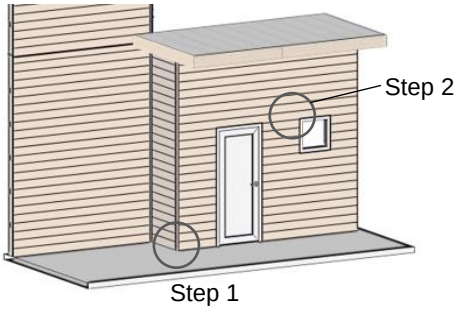

Step 1 – Corners

Install inside and outside corner bases or Craftsman inside and outside corners fastening every 16” O.C. with #10 Pan Head Screws. Corners typically extend from top to bottom of the area of application.

⚠ Check that components are level/plumb, flat and straight for best results.

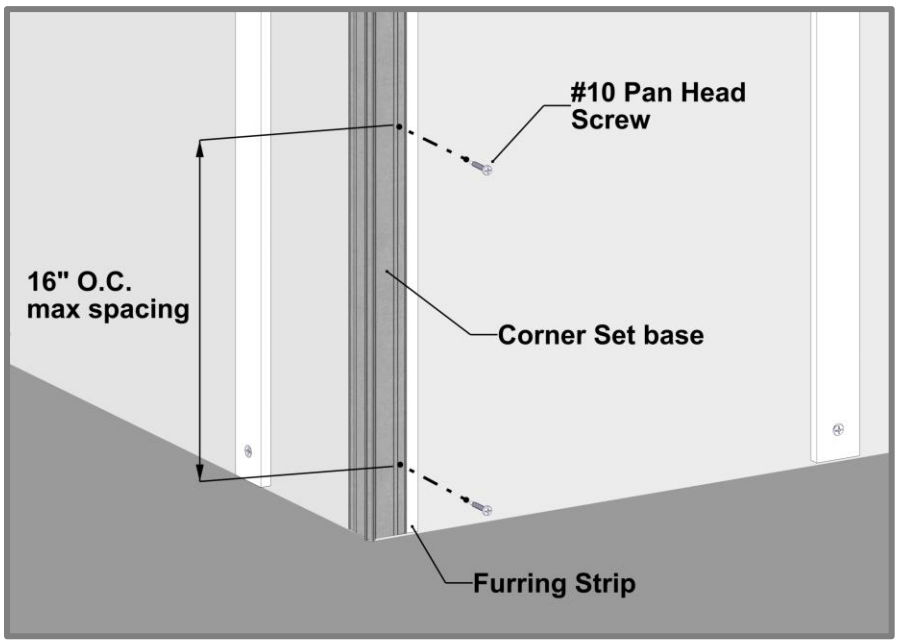

Step 2 – J-Track

Install J-Track or Two-Piece J-Track around windows and doors and at the edge of walls, fastening every 16” O.C. with #10 Pan Head Screws. Trims can be mitered for a clean corner look.

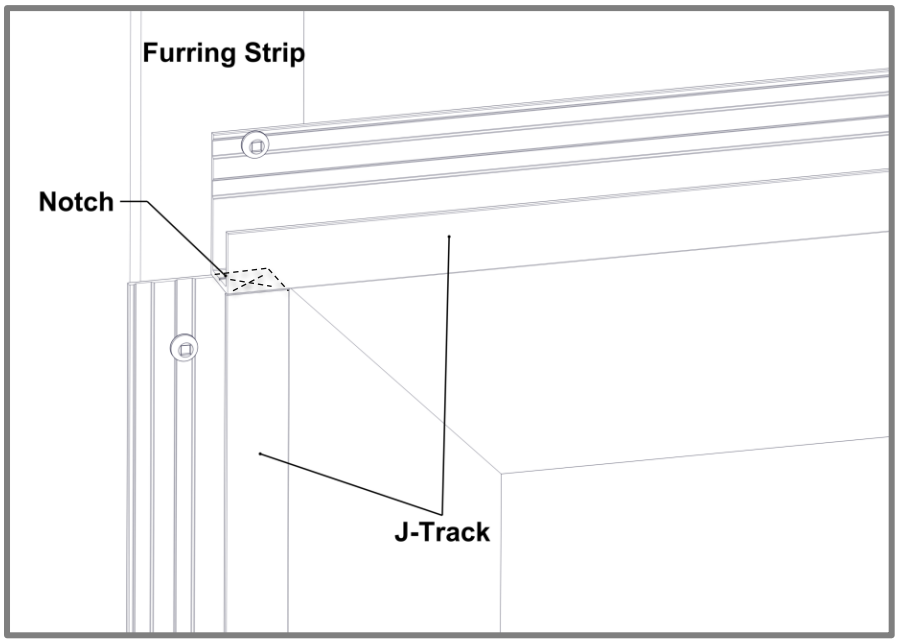

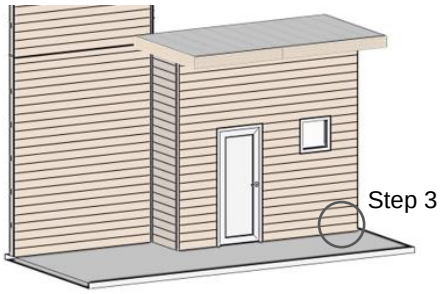

Step 3 – Starter Strip

Install the Starter Strip or Starter J-Track along the bottom of the wall(s), fastening every 16” O.C. max with #10 Pan Head Screws.
Fasten the Starter Strip at the Quick Screen Clip & the midpoint slot for a solid connection.

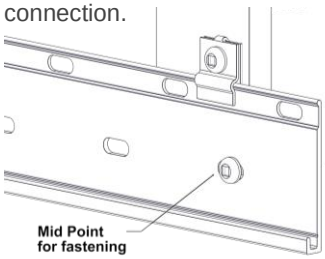

See **Appendix for project specific fastening requirements.**
Trims Fastening
-Table 3-6

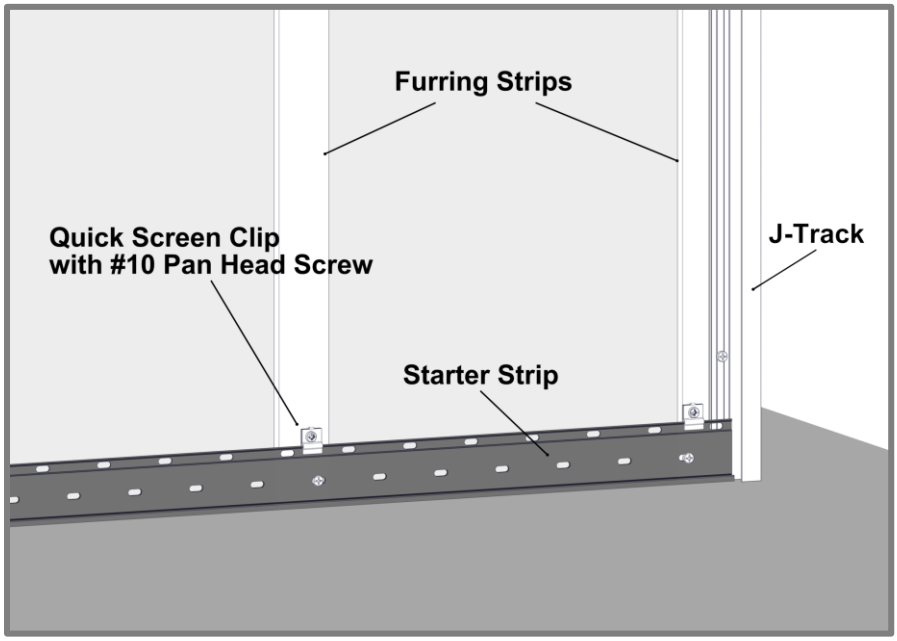

Step 4 – Flat Reveal
(Only if required, not shown on layout)

Install the Flat Reveal Set (base only) at the desired plank widths, fastening every 16” O.C. with #10 Pan Head Screws.

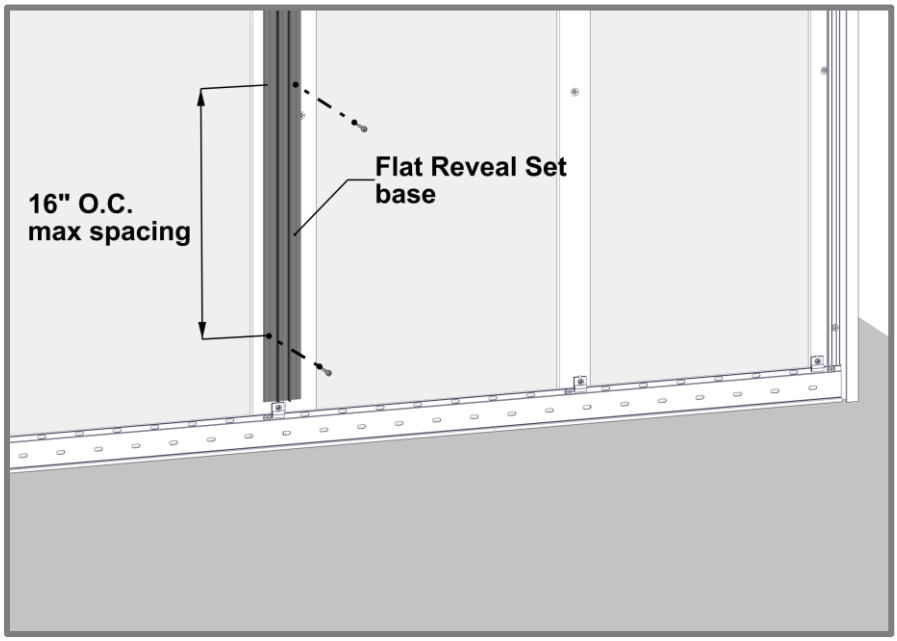

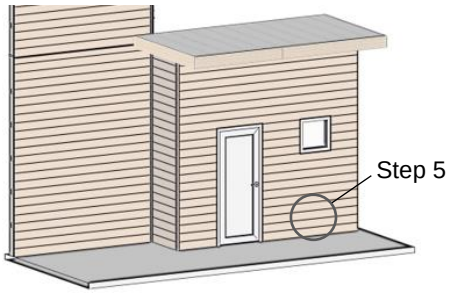

PLANK PREPARATION DURING INSTALL

1. **No** Taped/Drilled ends (cut off 1/2" each end).
2. **No** Damage/dents and correct plank sequence per project.
3. **Confirm** allowance for expansion/contraction & confirm trim/caps cover.
4. **Confirm** level substrate, shims might be required for a flat /straight plank install.

Step 5 – Planks

Place the planks onto the tongue of the Starter Strip, fully engaging the tongue.
It is good practice to check your installation every 2-3 rows for level/plumb and flat or straight, for best results.

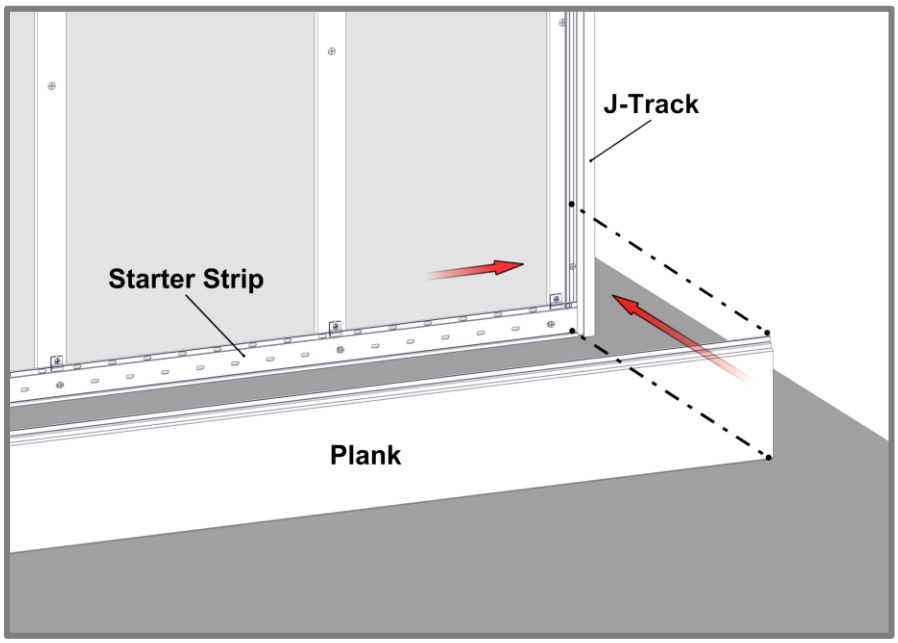

When installing Planks, ensure there is sufficient room for expansion and contraction of each Plank, also confirming component caps will cover.

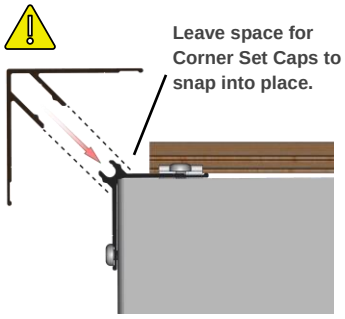

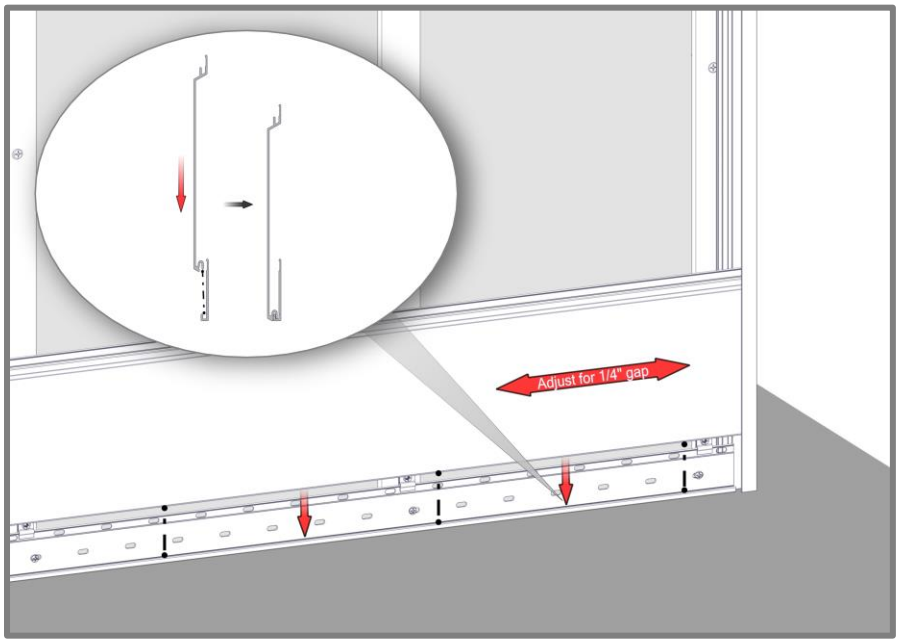

Install Quick Screen Clips every 32” (813mm) O.C. max spacing. Hard fasten only one point at the center of each plank, except where butt-joints are used. Shim Quick Screen Clips where needed to correct any substrate inconsistencies.

See **Appendix for project specific fastening requirements.**
Plank Fastening
- Tables 3-6

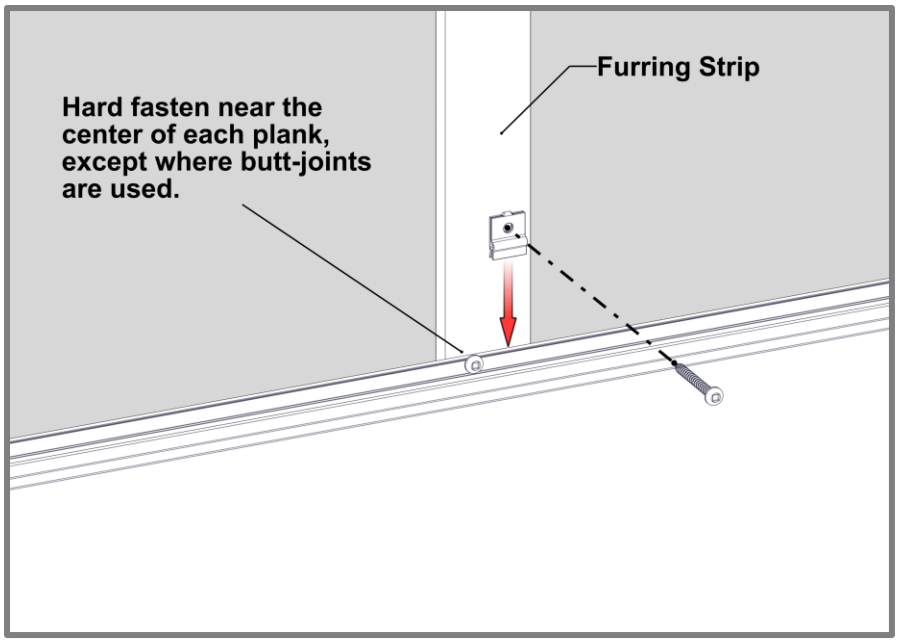

Install planks as needed. Where anchoring the planks securely can only be achieved over component flanges; split the Quick Screen Clip and use one piece on the front.
This will maintain each plank’s ability to expand and contract.

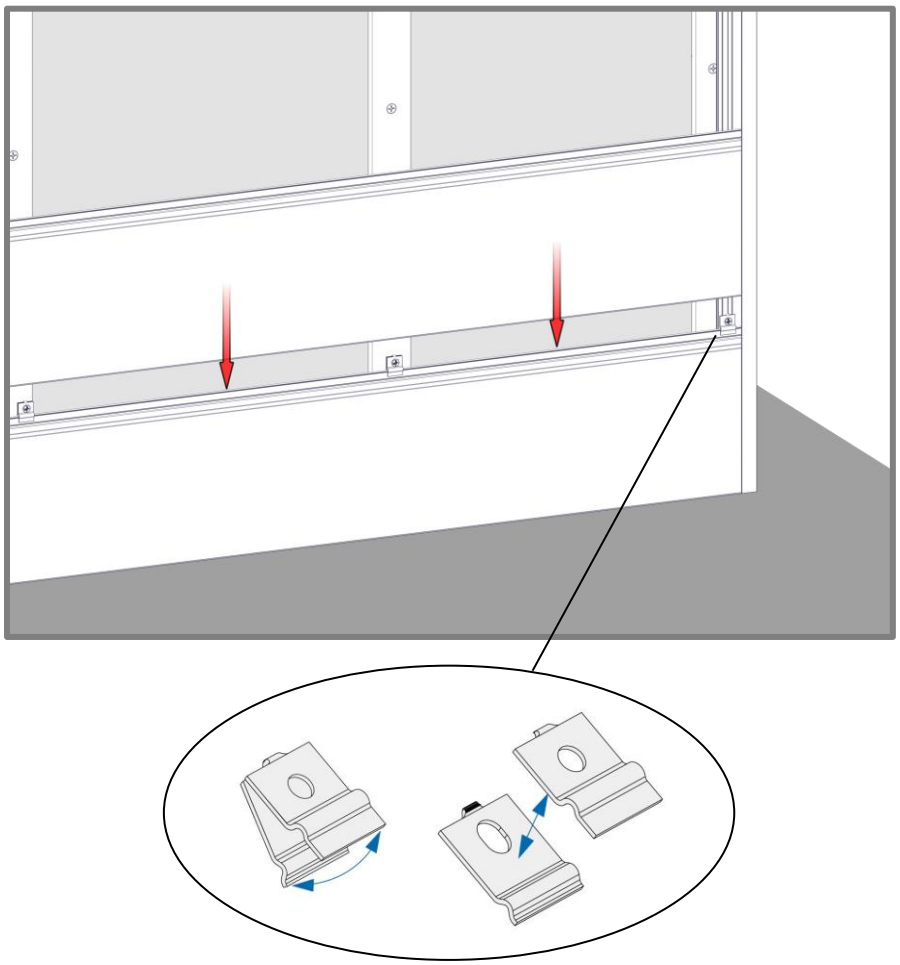

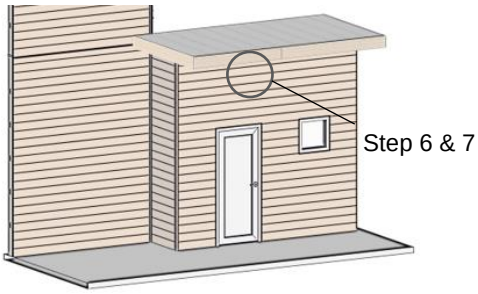

Step 6 – Termination Set

Install Termination Set (base only), fastening every 16” O.C.

Where terminating cut planks, provide a positive stop approximately every 16” (406mm).

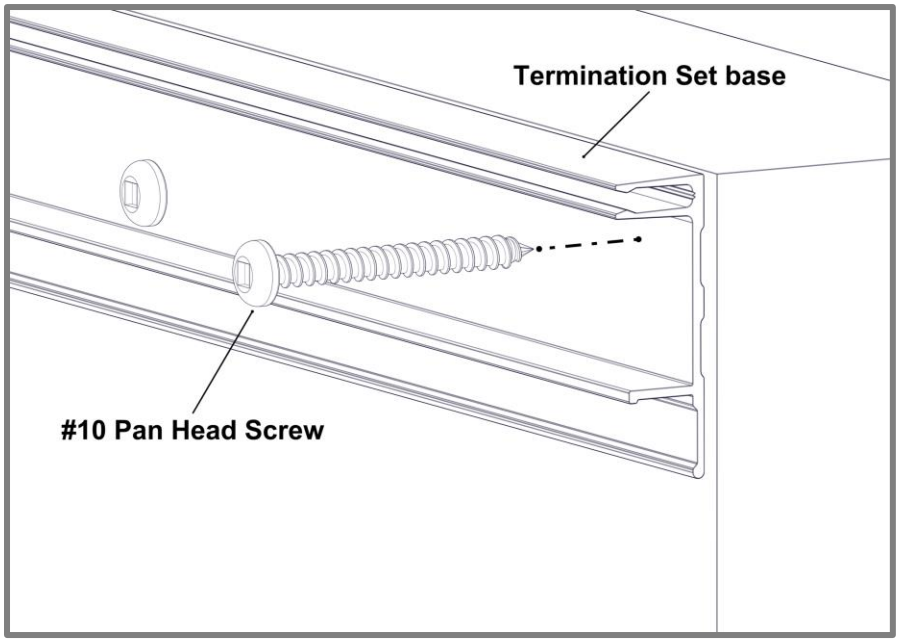

Step 7 – Last Row of Planks

Rip the last Plank, cutting it to width to suit the installation area(s). Install edge plank with a 1/4” gap and screw to lock the Plank into place.

Skip to Page 22 for Finishing Steps.

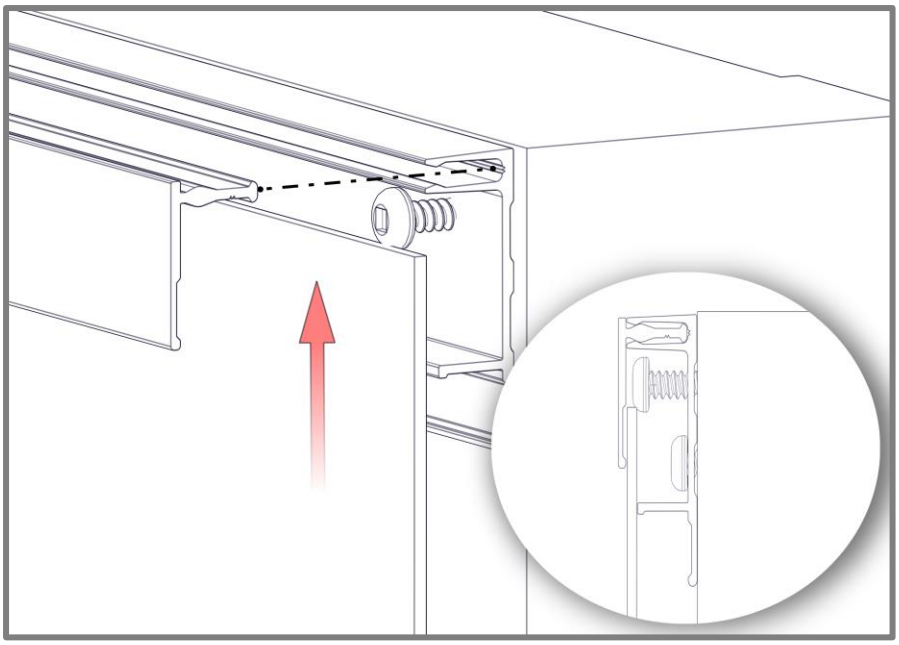

This Visual image cannot be displayed. The file may have been moved, renamed, or deleted. Verify that the link points to the correct file and location.

Install Steps - Vertical Cladding

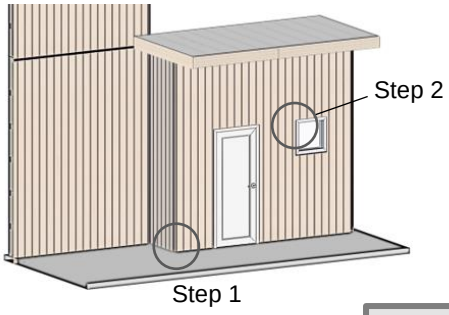

Step 1 – Corners

Install inside and outside corner bases, fastening every 16” O.C. with #10 Pan Head Screws. Corners typically extend from top to bottom of the area of application.

⚠ Check that components are level/plumb, flat and straight for best results.

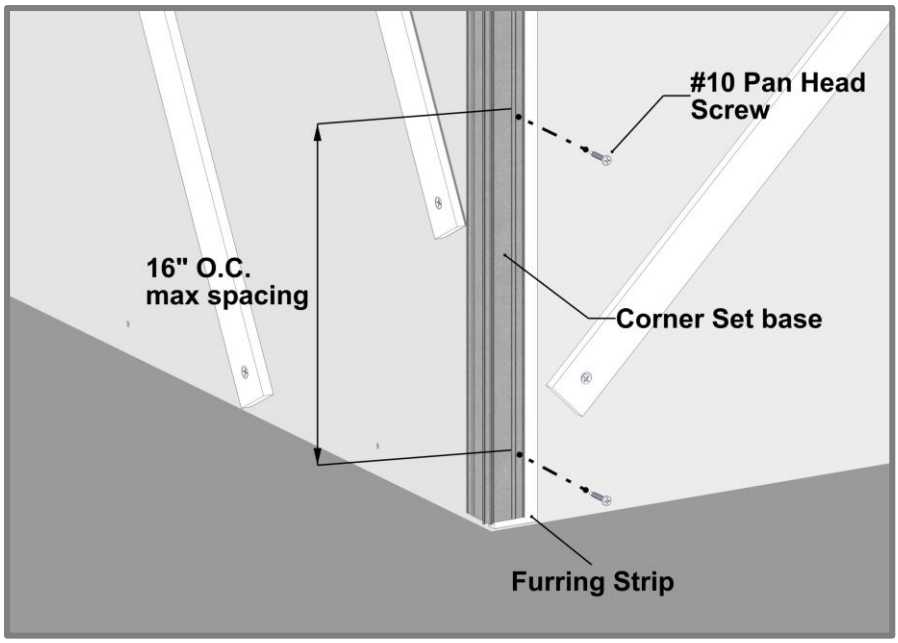

Step 2 – J-Track

Install J-Track or Two-Piece J-Track around windows and doors and at the top & bottom of walls, fastening every 16” O.C. with #10 Pan Head Screws. Trims can be mitered for a clean corner look.

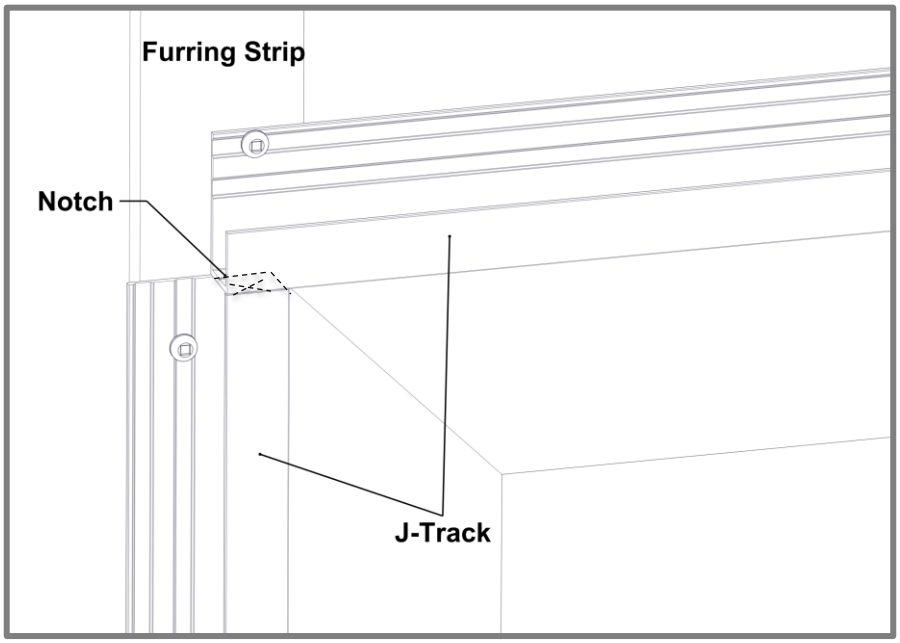

This Visual image cannot be displayed. The file may have been moved, renamed, or deleted. Verify that the link points to the correct file and location.

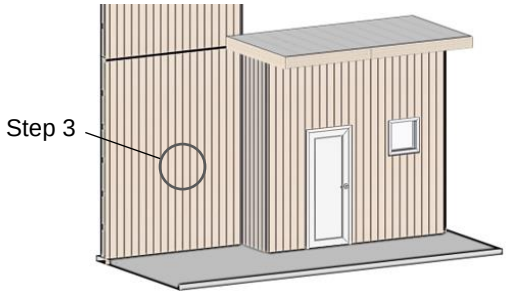

Step 3 – Back-to-Back Starter

Install the Back-to-Back Starter Strip at the center of the wall area to achieve equal width ends. Fasten both sides every 16” O.C. max with #10 Pan Head Screws.

⚠The Back-to-Back Starter should be secured with a Quick-Screen Clip on both sides of the component.

Alternately, the Starter Strip can be used and installed at the corner of the wall(s) over the Corner Set base and the Starter J-Track used at the edge of the walls.

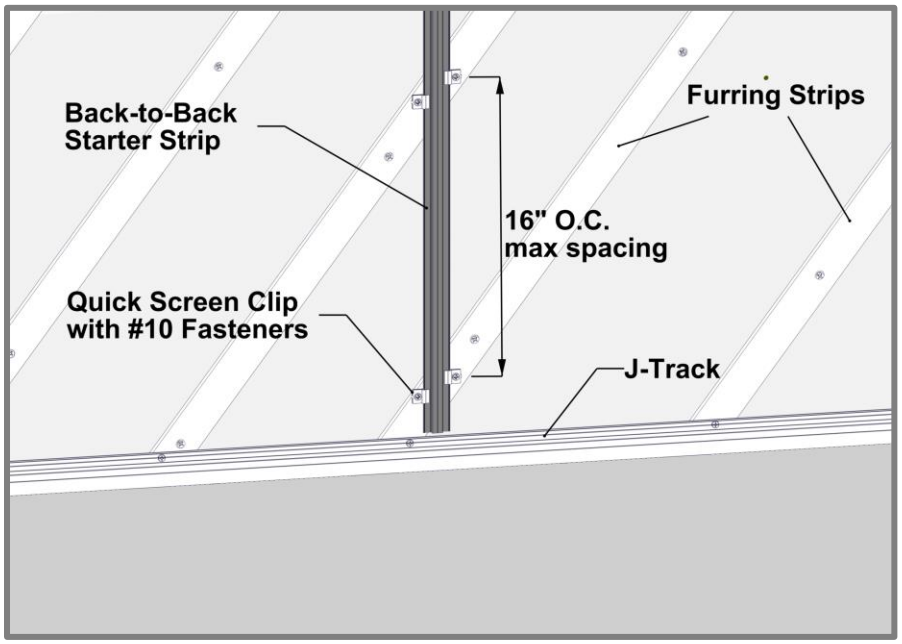

Appendix for project specific wind load requirements.
Trims Fastening
-Table 3-6

Step 4 –Flat Reveal or Offset Flat Reveal (2”)
(Only if required, not shown on layout)

Install the Flat Reveal Set (base only) at the desired plank widths, fastening every 16” O.C. with #10 Pan Head Screws.

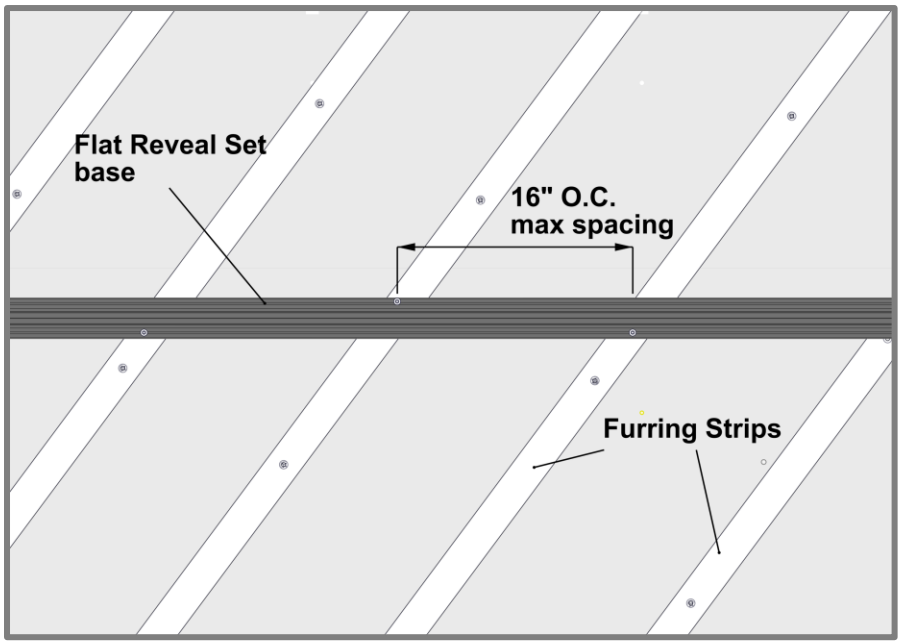

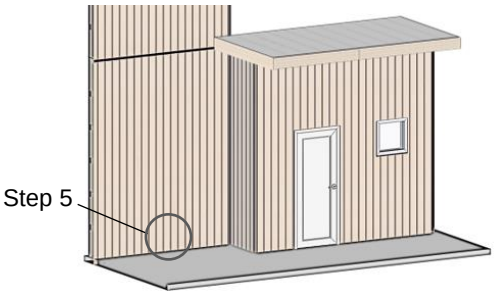

PLANK PREPARATION DURING INSTALL

1. **No** Taped/Drilled ends (cut off 1/2" each end).
2. **No** Damage/dents and correct plank sequence per project.
3. **Confirm** allowance for expansion/contraction & confirm trim/caps cover.
4. **Confirm** level substrate, shims might be required for a flat /straight plank install.

Step 5 – Planks

Place the planks into the groove of the Starter Strip, engaging the tongue.
It is good practice to check your installation every 2-3 rows for level/plumb and flat or straight, for best results.

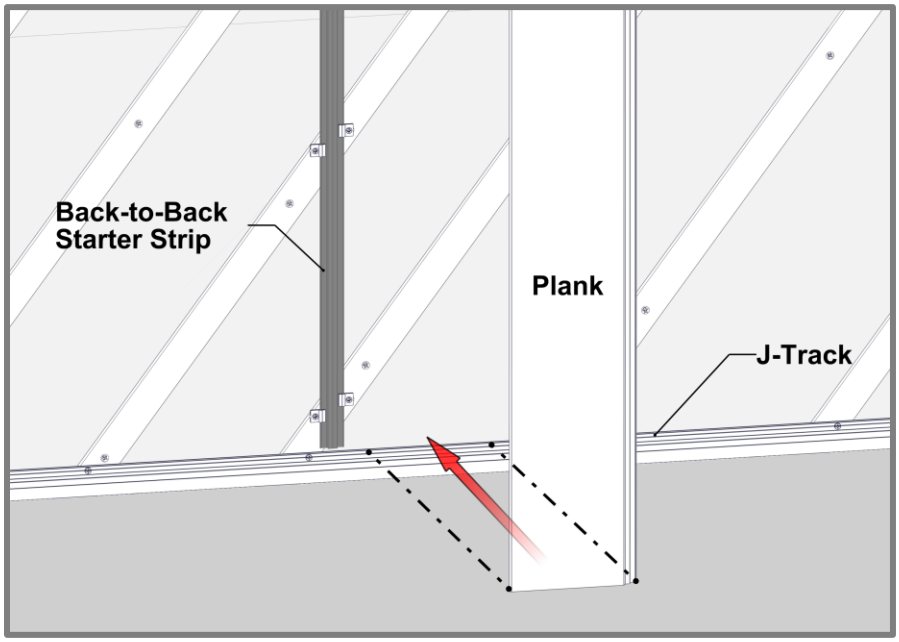

Ensure there is sufficient room for expansion and contraction of each Plank, also confirming component caps will cover.

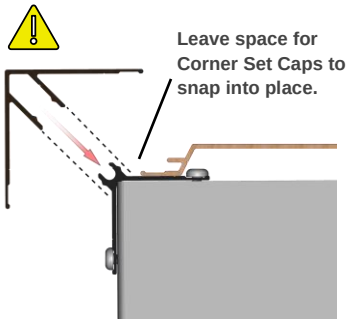

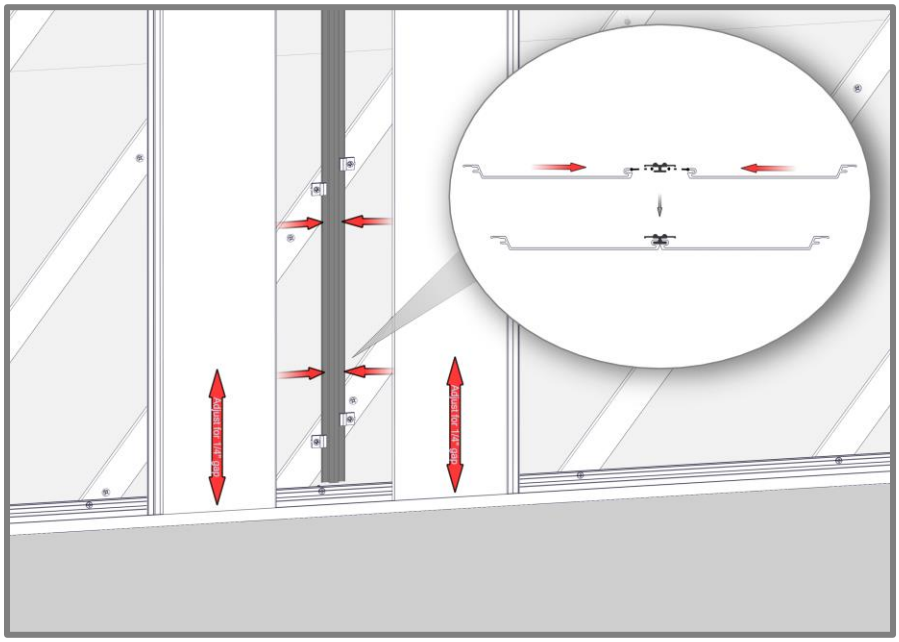

Install Quick Screen Clips every 32” (813mm) O.C. max spacing. Hard fasten only one point at the center of each plank, except where butt-joint are used. Shim Quick Screen Clips where needed to correct any substrate inconsistencies.

See **Appendix for project specific fastening requirements.**
Plank Fastening
- Tables 3-6

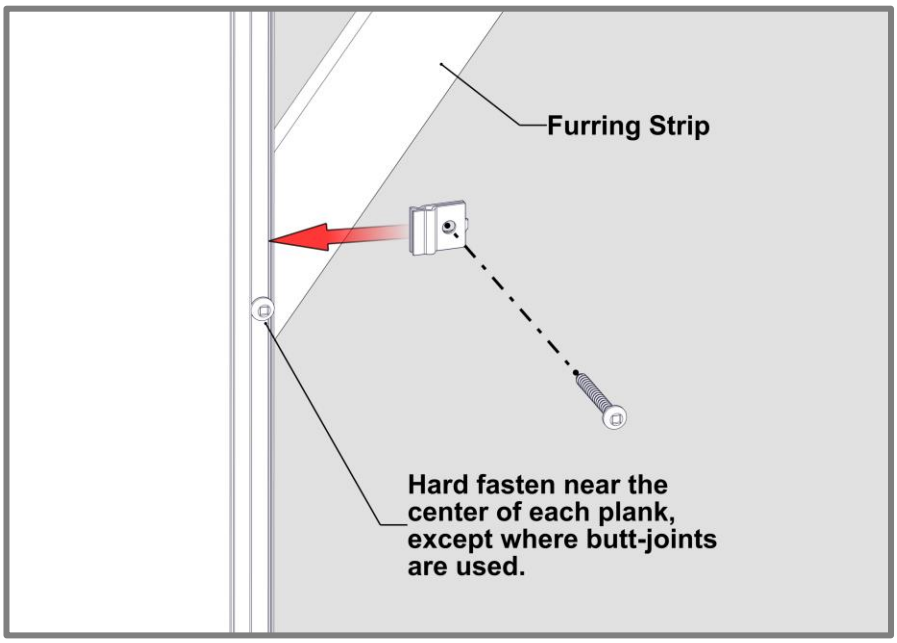

Install planks as needed. Where anchoring the planks securely can only be achieved over component flanges; split the Quick Screen Clip and use one piece on the front.
This will maintain each plank’s ability to expand and contract.

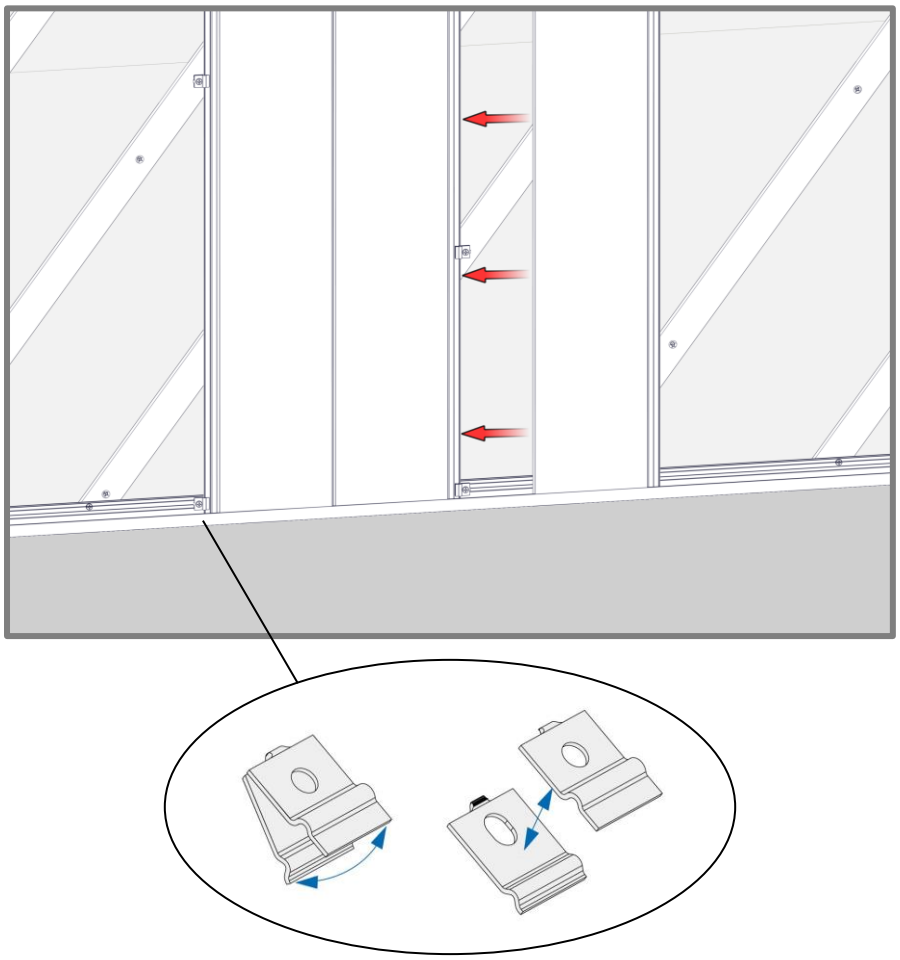

This Visual image cannot be displayed. The file may have been moved, renamed, or deleted. Verify that the link points to the correct file and location.

Step 6 & 7

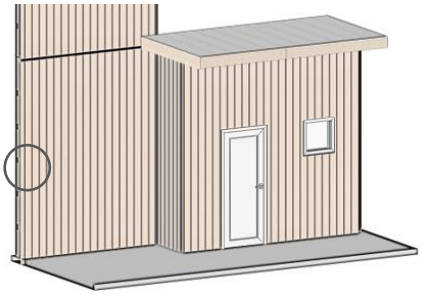

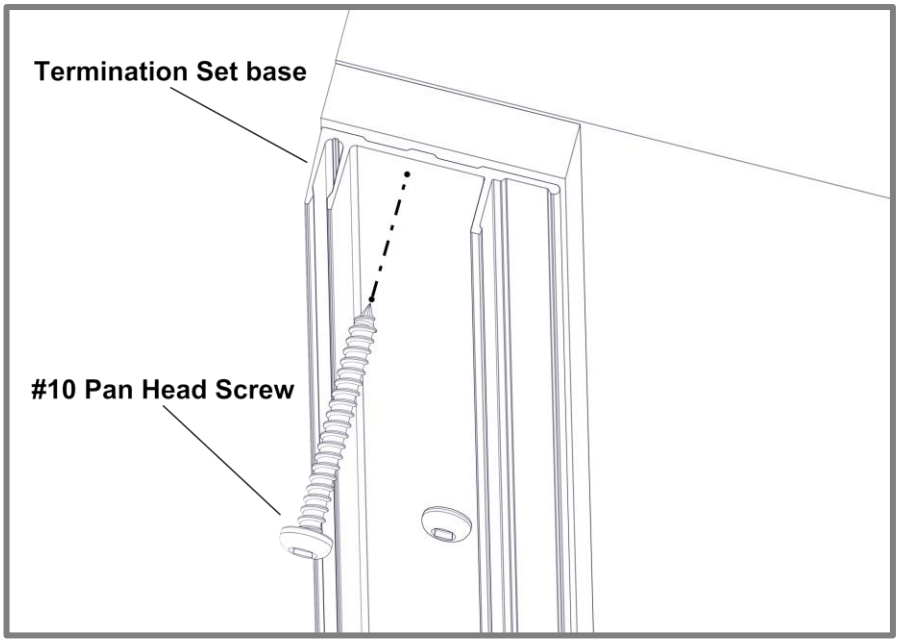

Step 6 – Termination Set

Install Termination Set (base only), fastening every 16” O.C.

Where terminating cut planks, provide a positive stop approximately every 16” (406mm).

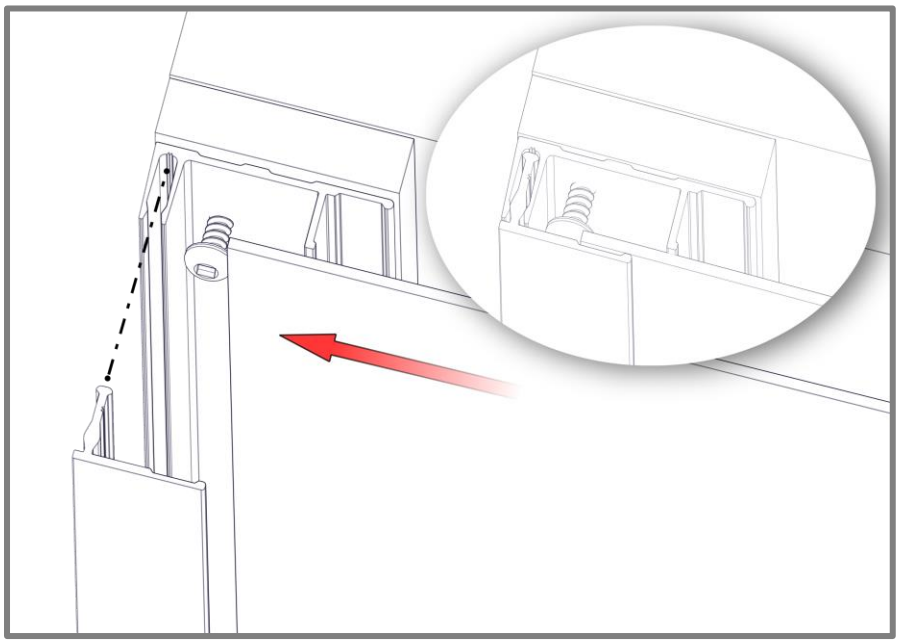

Step 7 – Last Row of Planks

Rip the last Plank, cutting it to width to suit the installation area(s). Install edge plank with a 1/4” gap and screw to lock the Plank into place.

See next page for Finishing Steps.

Finishing Steps - Once planks are installed, finish off the perimeter trims with caps from two-piece sets.

Component Caps

Location: Installed onto the base of the two-piece sets.

Details: If required, use a rubber mallet or hammer and block to protect the finish during this process. Confirm Caps cover Planks with sufficient room for expansion and contraction.

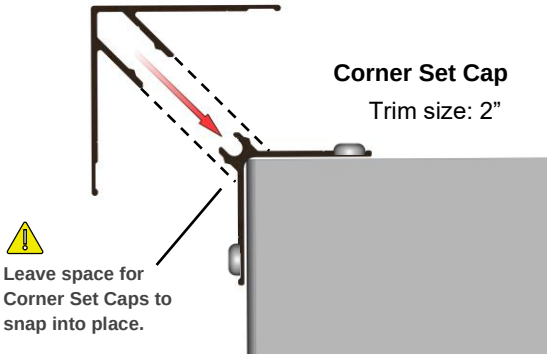

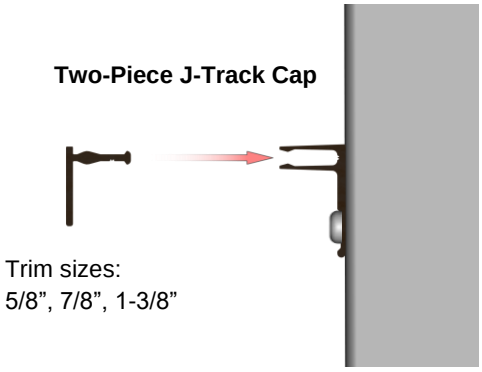

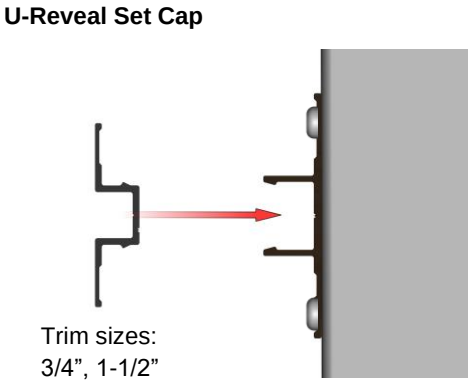

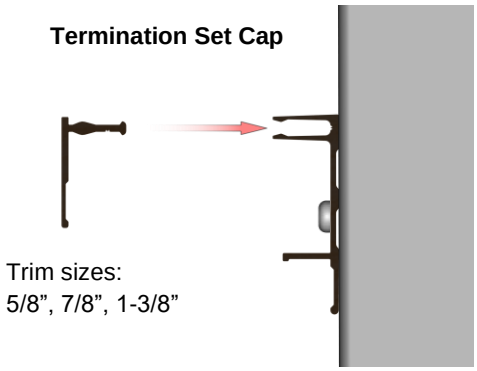

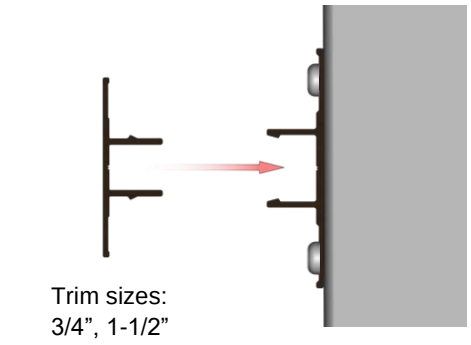

Details

Single Butt-Joints

- Consider using butt-joints along runs to minimize waste.
- ⚠ When installing staggered butt-joints, use the Butt-Joint Fastening Kit to ensure joints do not open up **(See Detail A & B)**.
  Fasteners should be placed at the uppermost location of the plank flange, to not interfere with the next plank engaging the tongue and groove properly. At the butt-joint, fasteners should be anchored into the Butt-Joint backer plate.
  (See Detail C)
- Rivets can be used for single butt-joints, however clearance of the rivets and room for movement is required.
- On exposed cuts such as butt-joints, trim ends or similar, use touch-up paint pens (purchased separately) to finish the ends of the two (2) planks at the butt-joint.
- DO NOT hard-fasten a plank to a component trim, as this will restrict its ability to expand & contract into the component.
- If no butt joints along the length, it is good practice to hard-fasten each plank directly through the flange near the center, to keep the planks from migrating.
- DO NOT hard-fasten more than one (1) location per plank.
- Hard fasten at the butt-joint or the center of each plank run.

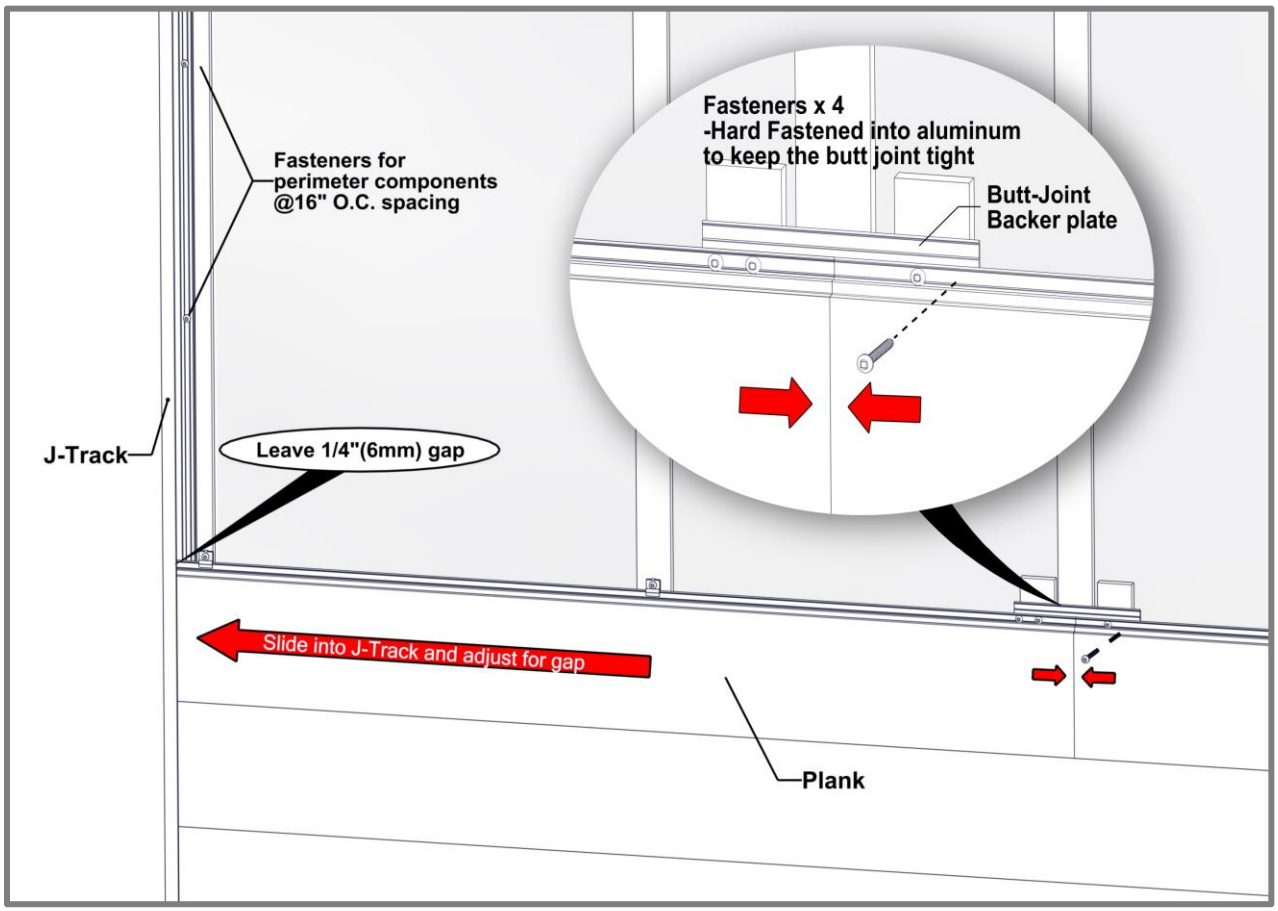

Detail A -Horizontal Cladding

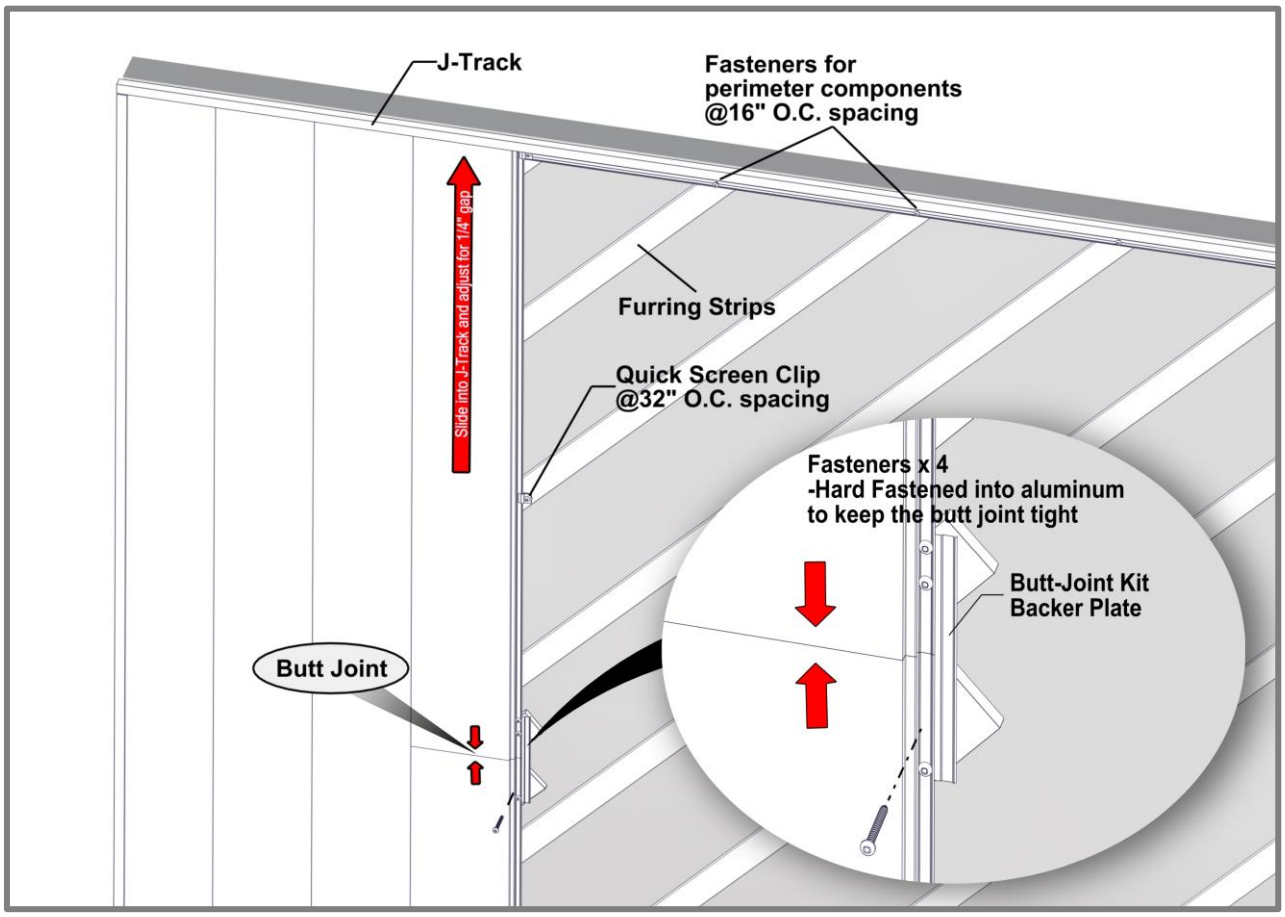

Detail B -Vertical Cladding

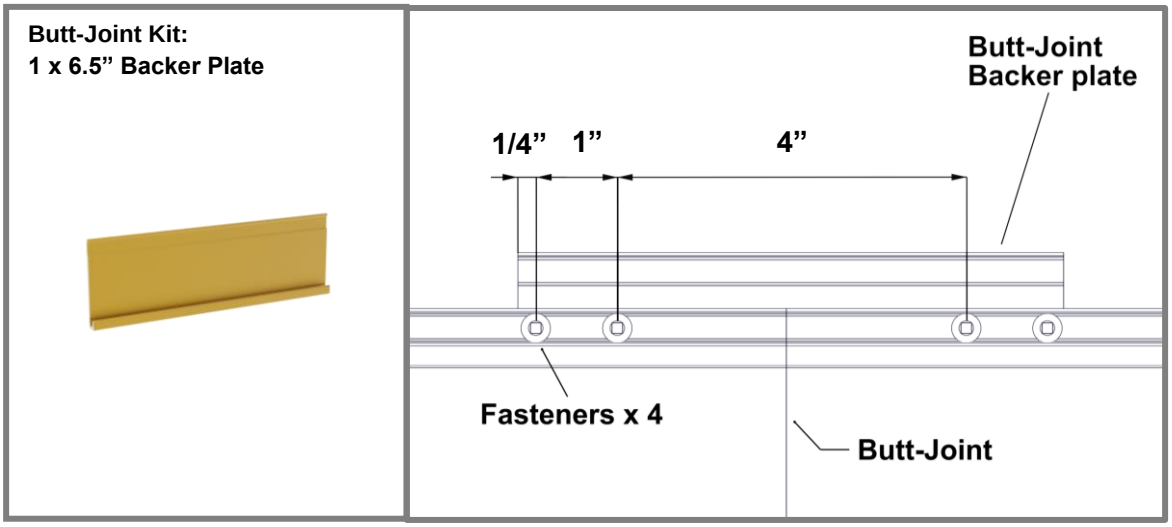

Detail C -Backer Plate (Hard Fastened)

Multiple Floating Butt-Joints

- ⚠ When installing staggered multiple floating butt-joints, use the Butt-Joint Fastening Kit to ensure joints do not open up. Rivets should be placed at the center of the plank flange, to not interfere with the next plank engaging the tongue and groove properly. **(See Detail D)**
- MUST HAVE furring strips or girts to allow room for movement.
- Recommended to be installed between furring strips or framing members to avoid contact which would restrict movement. **(See Detail E)**
- On exposed cuts such as butt-joints, trim ends or similar, use touch-up paint pens (purchased separately) to finish the ends of the two (2) planks at the butt-joint.
- DO NOT hard-fasten a plank to a component trim, as this will restrict its ability to expand & contract into the component.
- DO NOT hard-fasten more than one (1) location per multiple plank run.
- Hard fasten near the center of the multiple plank run.

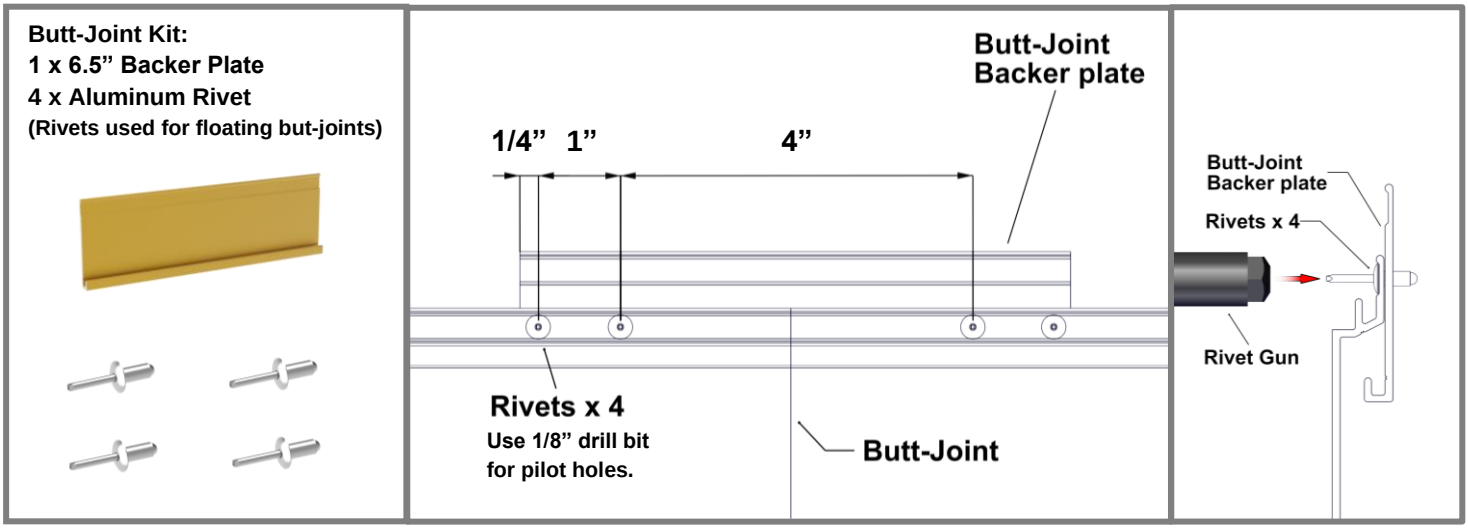

Detail D -Floating Butt-Joint

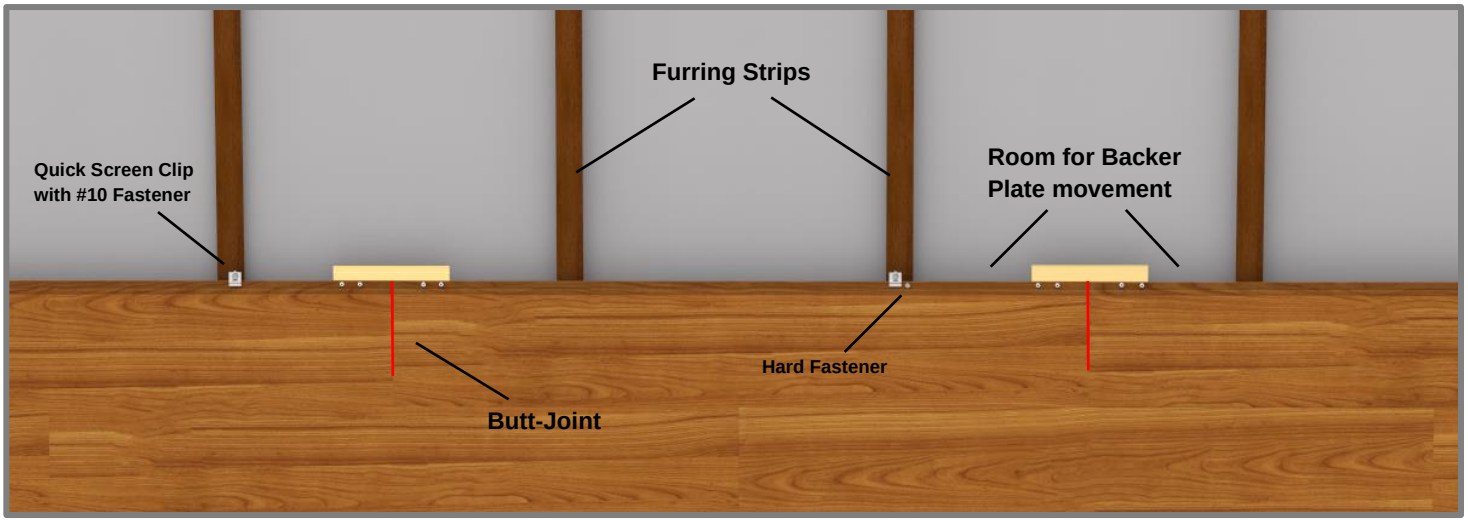

Detail E -Butt-Joint Movement

Floor elevation

Compression Joint

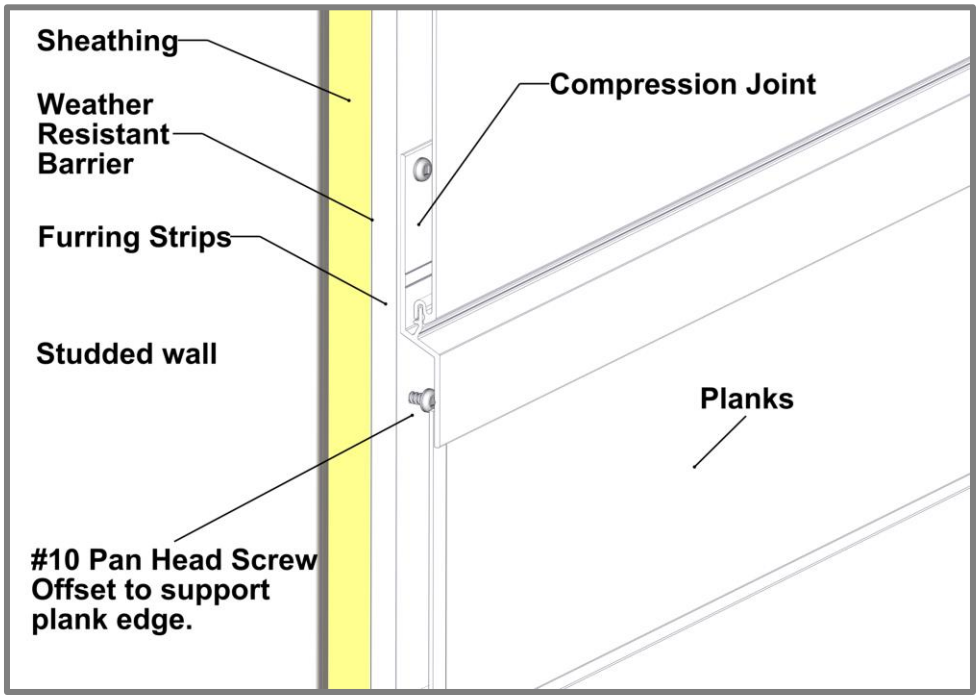

Type:	Compression Joint, Termination set/Starter J-Track, J-Track back-to-back.
Location:	Typically, at every floor elevation and where through-wall flashing is required.
Details:	Note the orientation of planks for through-wall flashing install.

Through-wall Flashing

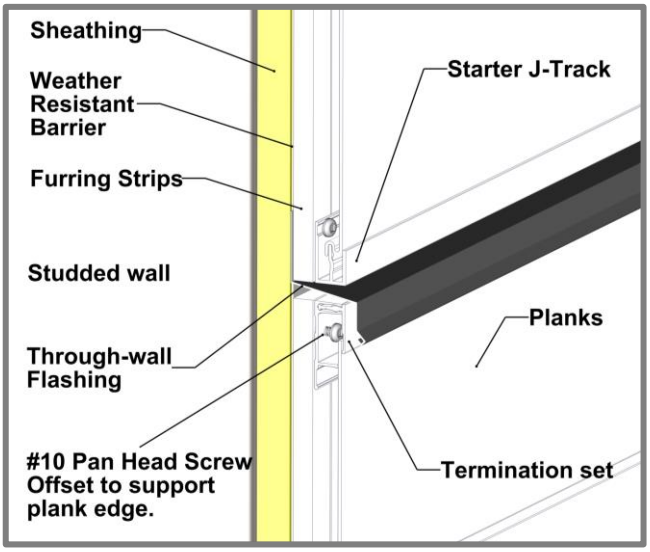

Horizontal Install

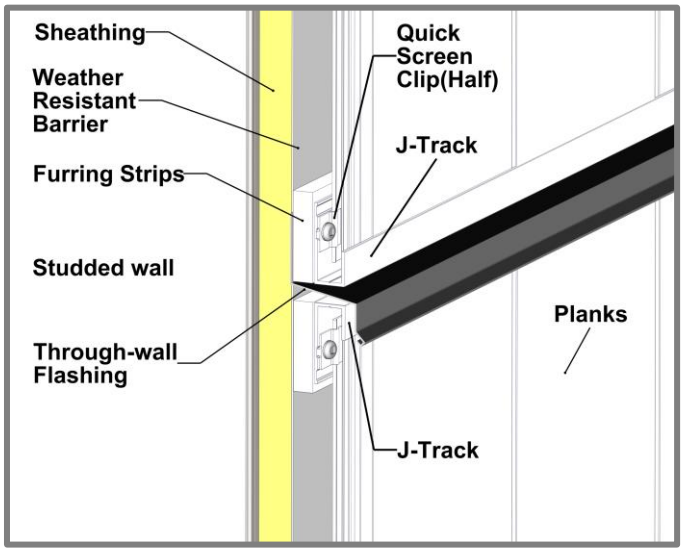

Vertical Install

Expansion reveals

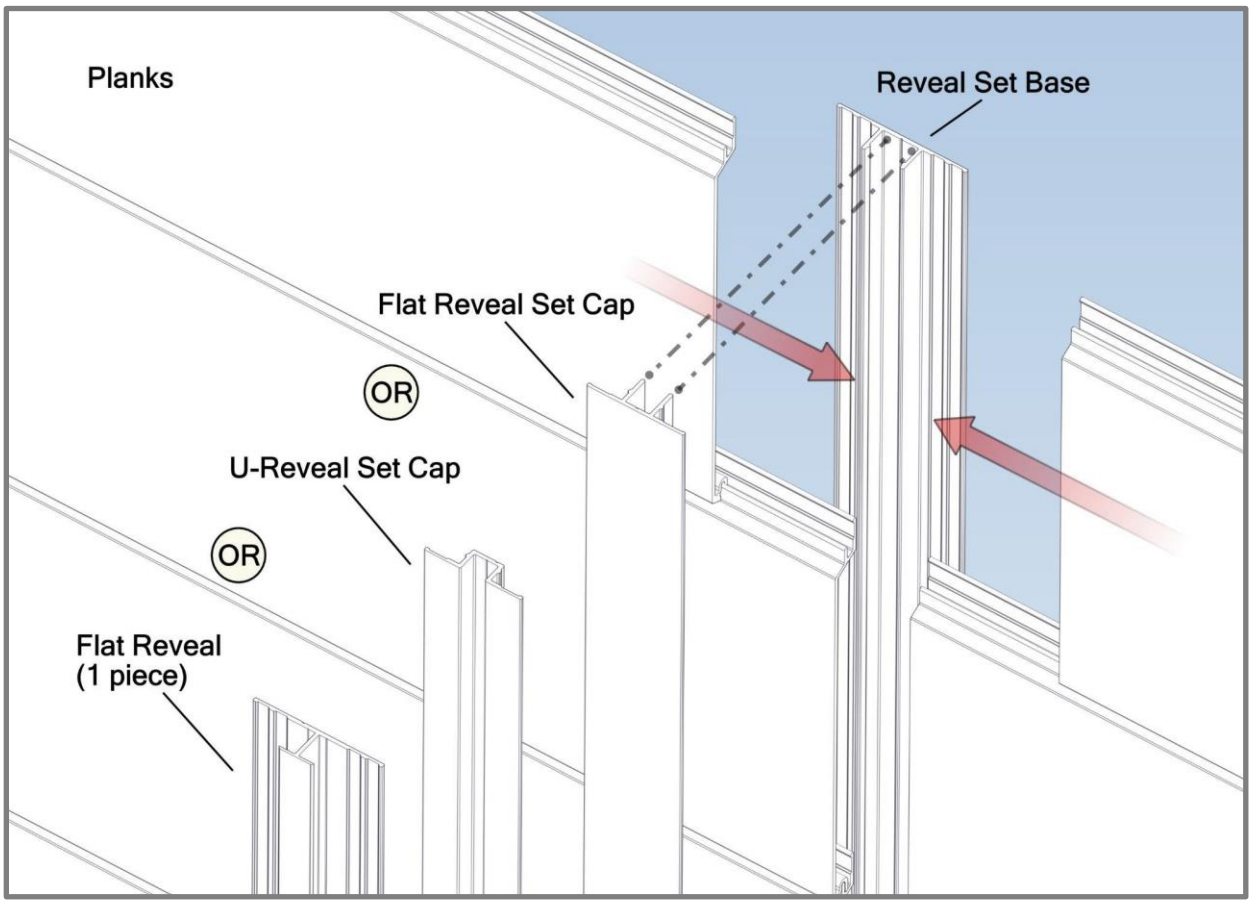

Type:	Traditional Flat Reveal Set/Traditional U-Reveal Set/Precision Flat Reveal**.**
Location:	Typically for wall areas greater than 24' (7.3m) long (no butt-joints) or 40' (12.2m) long (With staggered butt-joints). See **Expansion and contraction** for details.
Details:	Install base only to start and end cap once planks are installed.

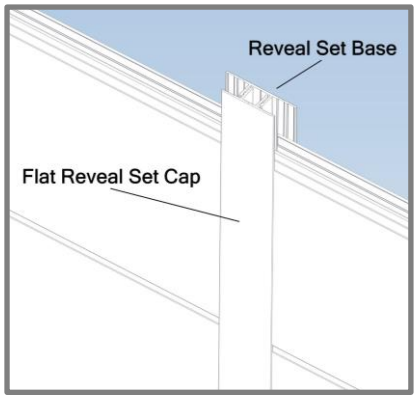

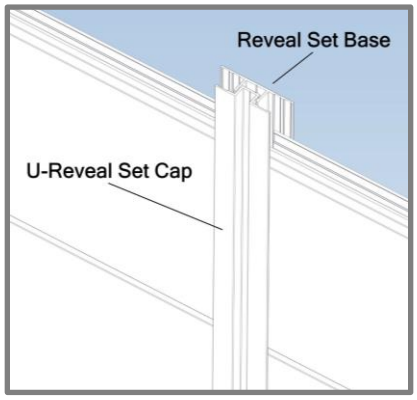

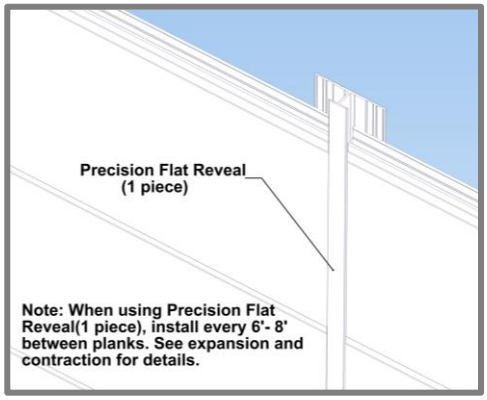

Appendix

Expansion and Contraction Tables

TABLE 1 - IMPERIAL

		AVERAGE TEMPERATURE AT TIME OF CUTTING & INSTALLATION										
	°C	-50	-40	-30	-20	-10	0	10	20	30	40	50
	°F	-58	-40	-22	-4	14	32	50	68	86	104	122
MIN/MAX POST CONSTRUCTION TEMP. °C	°F	EXPANSION OR CONTRACTION (INCH/FOOT)										
-50	-58	0.000	-0.003	-0.005	-0.008	-0.011	-0.014	-0.016	-0.019	-0.022	-0.024	-0.027
-40	-40	0.003	0.000	-0.003	-0.005	-0.008	-0.011	-0.014	-0.016	-0.019	-0.022	-0.024
-30	-22	0.005	0.003	0.000	-0.003	-0.005	-0.008	-0.011	-0.014	-0.016	-0.019	-0.022
-20	-4	0.008	0.005	0.003	0.000	-0.003	-0.005	-0.008	-0.011	-0.014	-0.016	-0.019
-10	14	0.011	0.008	0.005	0.003	0.000	-0.003	-0.005	-0.008	-0.011	-0.014	-0.016
0	32	0.014	0.011	0.008	0.005	0.003	0.000	-0.003	-0.005	-0.008	-0.011	-0.014
10	50	0.016	0.014	0.011	0.008	0.005	0.003	0.000	-0.003	-0.005	-0.008	-0.011
20	68	0.019	0.016	0.014	0.011	0.008	0.005	0.003	0.000	-0.003	-0.005	-0.008
30	86	0.022	0.019	0.016	0.014	0.011	0.008	0.005	0.003	0.000	-0.003	-0.005
40	104	0.024	0.022	0.019	0.016	0.014	0.011	0.008	0.005	0.003	0.000	-0.003
50	122	0.027	0.024	0.022	0.019	0.016	0.014	0.011	0.008	0.005	0.003	0.000

TABLE 2 - METRIC

		AVERAGE TEMPERATURE AT TIME OF CUTTING & INSTALLATION										
	°C	-50	-40	-30	-20	-10	0	10	20	30	40	50
	°F	-58	-40	-22	-4	14	32	50	68	86	104	122
MIN/MAX POST CONSTRUCTION TEMP. °C	°F	EXPANSION OR CONTRACTION (MM/METER)										
-50	-58	0.000	-0.230	-0.460	-0.690	-0.920	-1.150	-1.380	-1.610	-1.840	-2.070	-2.300
-40	-40	0.230	0.000	-0.230	-0.460	-0.690	-0.920	-1.150	-1.380	-1.610	-1.840	-2.070
-30	-22	0.460	0.230	0.000	-0.230	-0.460	-0.690	-0.920	-1.150	-1.380	-1.610	-1.840
-20	-4	0.690	0.460	0.230	0.000	-0.230	-0.460	-0.690	-0.920	-1.150	-1.380	-1.610
-10	14	0.920	0.690	0.460	0.230	0.000	-0.230	-0.460	-0.690	-0.920	-1.150	-1.380
0	32	1.150	0.920	0.690	0.460	0.230	0.000	-0.230	-0.460	-0.690	-0.920	-1.150
10	50	1.380	1.150	0.920	0.690	0.460	0.230	0.000	-0.230	-0.460	-0.690	-0.920
20	68	1.610	1.380	1.150	0.920	0.690	0.460	0.230	0.000	-0.230	-0.460	-0.690
30	86	1.840	1.610	1.380	1.150	0.920	0.690	0.460	0.230	0.000	-0.230	-0.460
40	104	2.070	1.840	1.610	1.380	1.150	0.920	0.690	0.460	0.230	0.000	-0.230
50	122	2.300	2.070	1.840	1.610	1.380	1.150	0.920	0.690	0.460	0.230	0.000

Table 3 - Fastener to Structure

LONGBOARD®
INSPIRING ARCHITECTURE

v.1.1

FASTENER TO STRUCTURE SPACING - WIND LOAD

T&G PLANKS		PSF (Factored / Ultimate)										
		20	30	40	50	60	70	80	90	100	110	120
QUICK-SCREEN CLIP SPACING (IN)	16"											
	24"											
	32"											

Plank Profiles: V-Groove (2-1/2", 4", 6"), Smooth (6"), Channel (6"), Lap Siding (6"), Board & Batten Siding (7")

TRIM COMPONENTS*		PSF (Factored / Ultimate)										
		20	30	40	50	60	70	80	90	100	110	120
	16"											
Soffit direct to truss	24"											

*Starter Strip requires Two (2) installation anchors at each fastener location: 1 Quick-Screen Clip + 1 Mid-Point slotted hole

Calculations are using L/180 deflection limits

SUBSTRATE TYPE	SUBSTRATE REQUIREMENTS	ANCHOR DESCRIPTION	MIN. EMBEDMENT	MIN. EDGE DISTANCE
WOOD	Min. specific gravity = 0.55 wood	#10 Pan Head Screw	1-1/2"	3/4"
STEEL	Min. 18 ga., min. 33 ksi.	#10 Tek Screw (grade 5)	3 threads penetration past metal structure	1/2"
CONCRETE**	Min. 3000 psi	3/16" ITW Tapcon	1"	1"
MASONRY - CMU**	Grout-filled block per ASTM C-90, min. 2000 psi		1"	2"

**For Concrete and Masonry/CMU; Furring Strips are recommended, where possible

GENERAL NOTES:

1. Adequacy of the structural stud framing (wood and/or metal) and concrete/masonry as a main wind force resiting system capable of withstanding and transferring applied product loads to the foundation is the responsibilty of the engineer or architect of record for the project of installation.
2. Substrate shall be designed and anchored to properly transfer all loads to the structure buck design and installation is the responsibilty of the engineer or architect of record for the project of installation.
3. The installation details described herein are generic and may not reflect actual conditions for a specific site. If site conditions cause installation to deviate from the requirements detailed herein, a licensed engineer or architect shall prepare site specific documents for use with this document.
4. An unfactored dead load of 1.5 psf was assumed for the cladding.

INSTALLATION NOTES:

1. One (1) installation anchor is required at each Quick-Screen Clip location. Minimum of two (2) anchors per plank.
2. Spacing is from clip/fastener center to center.
3. The number of installation anchors per the table is the minimum number of anchors to be used for product installation.
4. Install individual installation anchors within a tolerance of +/- 1/2" of the specified spacings. Tolerances are not cumulative from one installation anchor to the next.
5. If fastening to every second stud, the attachment stud shall be staggered between adjacent runs of cladding.
6. Minimum embedment and edge distance exclude wall finishes, including but not limited to wood furrings, stucco, foam, brick veneer, sheathing and siding.
7. Installation anchors and associated hardware must be made of corrosion resistant material or have a corrosion resistant coating. Common fastener types can be equal or better to a & b listed below:
   a. Zinc plated fasteners for moderate climate zones
   b. 316 Stainless Steel fasteners for coastal climate zones
8. For CMU grout filled block, do not install installation anchors into mortar joints. Edge distance is measured from free edge of block or edge of mortar joint into face shell of block.
9. Installation anchors shall be installed in accordance with anchor manufacturer's installation instructions, and anchors shall not be used in substrates with strengths less than the minimum strength specified by the anchor manufacturer.

Table 4 - Fastener to Sheathing (2-1/2” Planks)

LONGBOARD®
INSPIRING ARCHITECTURE

V.1.1

FASTENER TO WOOD SHEATHING SPACING - WIND LOAD

2-1/2" PLANKS		PSF (Factored / Ultimate)										
		20	30	40	50	60	70	80	90	100	110	120
QUICK-SCREEN CLIP SPACING (IN)	24"											
	32"											
Plank Profile: 2-1/2" V-Groove												

TRIM COMPONENTS*		PSF (Factored / Ultimate)										
		20	30	40	50	60	70	80	90	100	110	120
	16"											
*Starter Strip requires Two (2) installation anchors at each fastener location: 1 Quick-Screen Clip + 1 Mid-Point slotted hole												

Calculations are using L/60 deflection limits

SUBSTRATE TYPE	SUBSTRATE REQUIREMENTS	ANCHOR DESCRIPTION	MIN. SCREW LENGTH	MIN. EMBEDMENT	MIN. EDGE DISTANCE
7/16" OSB/PLYWOOD	APA rated sheathing or better	#10 Pan Head Wood Screw	1"	7/16"	1"

GENERAL NOTES:

1. Substrate shall be designed and anchored to properly transfer all loads to the structure buck design and installation is the responsibilty of the engineer or architect of record for the project of installation.
2. The installation details described herein are generic and may not reflect actual conditions for a specific site. If site conditions cause installation to deviate from the requirements detailed herein, a licensed engineer or architect shall prepare site specific documents for use with this document.
3. An unfactored dead load of 1.5 psf was assumed for the cladding.

INSTALLATION NOTES:

1. One (1) installation anchor is required at each Quick-Screen Clip location. Minimum of two (2) anchors per plank.
2. Spacing is from clip/fastener center to center.
3. The number of installation anchors per the table is the minimum number of anchors to be used for product installation.
4. Install individual installation anchors within a tolerance of +/- 1/2" of the specified spacings. Tolerances are not cumulative from one installation anchor to the next.
5. Installation anchors and associated hardware must be made of corrosion resistant material or have a corrosion resistant coating. Common fastener types can be equal or better to a & b listed below:
   a. Zinc plated fasteners for moderate climate zones
   b. 316 Stainless Steel fasteners for coastal climate zones
6. Installation anchors shall be installed in accordance with anchor manufacturer's installation instructions, and anchors shall not be used in substrates with strengths less than the minimum strength specified by the anchor manufacturer.

REFERENCED DATA:

2023 Florida Building Code

2018 National Design Specification for Wood Construction

Fastener Loads for Plywood - Screws (2011 APA - Engineered Wood Association)

Table 5 - Fastener to Sheathing (4” Planks)

LONGBOARD®
INSPIRING ARCHITECTURE

V.1.1

FASTENER TO WOOD SHEATHING SPACING - WIND LOAD

4" PLANKS		PSF (Factored / Ultimate)										
		20	30	40	50	60	70	80	90	100	110	120
QUICK-SCREEN CLIP SPACING (IN)	16"											
	24"											
	32"											

Plank Profile: 4" V-Groove

TRIM COMPONENTS*		PSF (Factored / Ultimate)										
		20	30	40	50	60	70	80	90	100	110	120
	16"											

*Starter Strip requires Two (2) installation anchors at each fastener location: 1 Quick-Screen Clip + 1 Mid-Point slotted hole

Calculations are using L/60 deflection limits

SUBSTRATE TYPE	SUBSTRATE REQUIREMENTS	ANCHOR DESCRIPTION	MIN. SCREW LENGTH	MIN. EMBEDMENT	MIN. EDGE DISTANCE
7/16" OSB/PLYWOOD	APA rated sheathing or better	#10 Pan Head Wood Screw	1"	7/16"	1"

GENERAL NOTES:

1. Substrate shall be designed and anchored to properly transfer all loads to the structure buck design and installation is the responsibilty of the engineer or architect of record for the project of installation.
2. The installation details described herein are generic and may not reflect actual conditions for a specific site. If site conditions cause installation to deviate from the requirements detailed herein, a licensed engineer or architect shall prepare site specific documents for use with this document.
3. An unfactored dead load of 1.5 psf was assumed for the cladding.

INSTALLATION NOTES:

1. One (1) installation anchor is required at each Quick-Screen Clip location. Minimum of two (2) anchors per plank.
2. Spacing is from clip/fastener center to center.
3. The number of installation anchors per the table is the minimum number of anchors to be used for product installation.
4. Install individual installation anchors within a tolerance of +/- 1/2" of the specified spacings. Tolerances are not cumulative from one installation anchor to the next.
5. Installation anchors and associated hardware must be made of corrosion resistant material or have a corrosion resistant coating. Common fastener types can be equal or better to a & b listed below:
   a. Zinc plated fasteners for moderate climate zones
   b. 316 Stainless Steel fasteners for coastal climate zones
6. Installation anchors shall be installed in accordance with anchor manufacturer's installation instructions, and anchors shall not be used in substrates with strengths less than the minimum strength specified by the anchor manufacturer.

REFERENCED DATA:

2023 Florida Building Code

2018 National Design Specification for Wood Construction

Fastener Loads for Plywood - Screws (2011 APA - Engineered Wood Association)

Table 6 - Fastener to Sheathing (6” Planks)

LONGBOARD®
INSPIRING ARCHITECTURE

V.1.1

FASTENER TO WOOD SHEATHING SPACING - WIND LOAD

6" Planks, 6" Lap Siding, 7" Board & Batten		PSF (Factored / Ultimate)										
		20	30	40	50	60	70	80	90	100	110	120
QUICK-SCREEN CLIP SPACING (IN)	12"											
	16"											
	24"											
	32"											

Plank Profiles: 6" V-Groove, 6" Smooth, 6" Channel, 6" Lap, 7" Board & Batten

TRIM COMPONENTS*		PSF (Factored / Ultimate)										
		20	30	40	50	60	70	80	90	100	110	120
	16"											

*Starter Strip requires Two (2) installation anchors at each fastener location: 1 Quick-Screen Clip + 1 Mid-Point slotted hole

Calculations are using L/60 deflection limits

SUBSTRATE TYPE	SUBSTRATE REQUIREMENTS	ANCHOR DESCRIPTION	MIN. SCREW LENGTH	MIN. EMBEDMENT	MIN. EDGE DISTANCE
7/16" OSB/PLYWOOD	APA rated sheathing or better	#10 Pan Head Wood Screw	1"	7/16"	1"

GENERAL NOTES:

1. Substrate shall be designed and anchored to properly transfer all loads to the structure buck design and installation is the responsibilty of the engineer or architect of record for the project of installation.
2. The installation details described herein are generic and may not reflect actual conditions for a specific site. If site conditions cause installation to deviate from the requirements detailed herein, a licensed engineer or architect shall prepare site specific documents for use with this document.
3. An unfactored dead load of 1.5 psf was assumed for the cladding.

INSTALLATION NOTES:

1. One (1) installation anchor is required at each Quick-Screen Clip location. Minimum of two (2) anchors per plank.
2. Spacing is from clip/fastener center to center.
3. The number of installation anchors per the table is the minimum number of anchors to be used for product installation.
4. Install individual installation anchors within a tolerance of +/- 1/2" of the specified spacings. Tolerances are not cumulative from one installation anchor to the next.
5. Installation anchors and associated hardware must be made of corrosion resistant material or have a corrosion resistant coating. Common fastener types can be equal or better to a & b listed below:
   a. Zinc plated fasteners for moderate climate zones
   b. 316 Stainless Steel fasteners for coastal climate zones
6. Installation anchors shall be installed in accordance with anchor manufacturer's installation instructions, and anchors shall not be used in substrates with strengths less than the minimum strength specified by the anchor manufacturer.

REFERENCED DATA:

2023 Florida Building Code

2018 National Design Specification for Wood Construction

Fastener Loads for Plywood - Screws (2011 APA - Engineered Wood Association)

LONGBOARD®
INSPIRING ARCHITECTURE

Radius Table

APPLICATION	A -Circular	B -Curved walls	C -Convex	D -Concave
DIAGRAMS	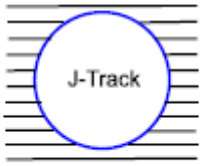	Termination Set 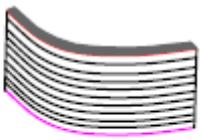 *Starter	J-Track 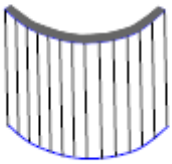 J-Track	J-Track 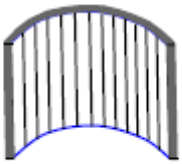 J-Track
TRIMS	**Minimum Radius**			
Non-Tempered Precision J-Track (5/8")	**1.5' (0.46m)**	N/A	**1.5' (0.46m)**	**2' (0.61m)**
Precision J-Track (5/8")	15' (4.57m)	N/A	N/A	N/A
Precision Two-Piece J-Track w. J-base	15' (4.57m)	N/A	8' (2.44m)	8' (2.44m)
Precision Termination Set	N/A	12' (4.57m)	N/A	N/A
Non-Tempered Craftsman J-Track (7/8")	**6' (1.83m)**	N/A	**6' (1.83m)**	**6' (1.83m)**
Craftsman J-Track (7/8")	38' (11.6m)	N/A	20' (6.1m)	20' (6.1m)
Craftsman Two-Piece J-Track w. J-Base	20' (6.1m)	N/A	8' (2.44m)	8' (2.44m)
Craftsman Termination Set	N/A	12' (4.57m)	N/A	N/A
Traditional Two-Piece J-Track w. J-base	38' (11.6m)	N/A	8' (2.44m)	8' (2.44m)
Traditional Termination Set	N/A	12' (4.57m)	N/A	N/A
PLANKS	**Minimum Radius**			
2 1/2" V-Groove	N/A	12' (4.57m)	**1.5' (0.46m)**	**2' (0.61m)**
2 1/2" V-Groove Perforated	N/A	12' (4.57m)	**1.5' (0.46m)**	**2' (0.61m)**
4" V-Groove	N/A	12' (4.57m)	3' (0.91m)	6' (1.83m)
6" V-Groove	N/A	12' (4.57m)	3' (0.91m)	6' (1.83m)
6" Channel	N/A	12' (4.57m)	3' (0.91m)	6' (1.83m)
6" Smooth Plank	N/A	12' (4.57m)	3' (0.91m)	6' (1.83m)
6" V-Groove Perforated	N/A	12' (4.57m)	3' (0.91m)	6' (1.83m)
6" Smooth Plank Perforated	N/A	12' (4.57m)	3' (0.91m)	6' (1.83m)
4" Castellation	N/A	12' (4.57m)	3' (0.91m)	6' (1.83m)
8" Castellation	N/A	12' (4.57m)		
6" Triple Bevel	N/A	19' (5.8m)	3' (0.91m)	6' (1.83m)
8" V-Groove	N/A	12' (4.57m)		

Note 1: When considering tight radii bends, use Non-Tempered Trim components for the minimum radius.

Note 2: When bending and securing components, bend against solid secure object and take care not to over bend.

*Note 3: Starter Strip meets or exceeds the performance of all the listed application and limitations.

Proper Handling of Longboard Products

To help avoid injury and product damage, Longboard products require proper handling to and from storage areas during installation. When carrying or installing any products it is recommended that they be moved or carried by at least two people with each support point approximately 4ft from the ends. **Carrying products without proper support can cause excessive bending which may damage the appearance or finish of the product.** Any short cut lengths should also be carried on edge while supporting the material. See below for details.

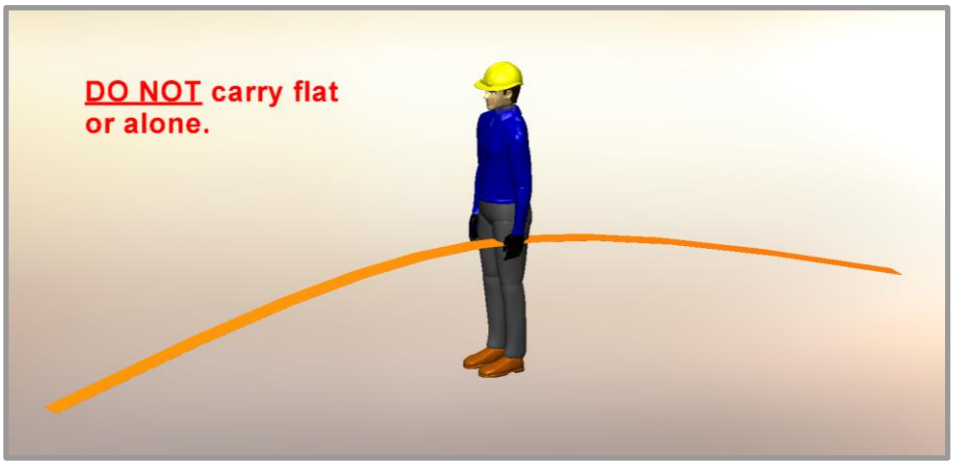

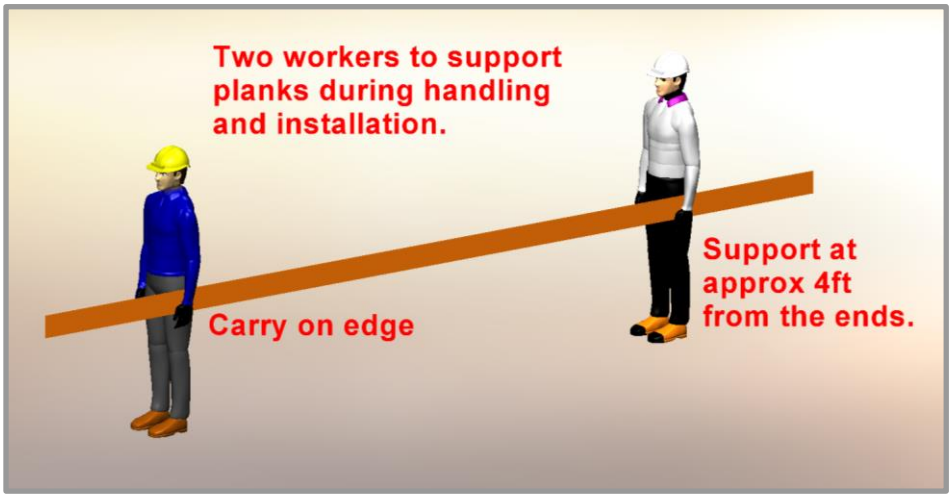

⚠ Delivery, Storage & Handling ⚠

- Always inspect the delivery for damage and contact LB ASAP if there are any issues: info@longboardproducts.com or 1-800-604-0343 and include your PO# and any pictures if possible. Longboard is not responsible for the installation of blemished or damaged material.
- Be sure to store the material flat, keep it dry, safe & secure and remain in unopened cartons until ready to be installed.
- Always wear appropriate PPE when handling products.

BLANK PAGE

Longboard Architectural Products Inc.
© Longboard Architectural Products Inc. All rights reserved.

Longboard® is a registered trademark of Longboard Architectural Products Inc.

Longboard
1777 Clearbrook Road
Abbotsford, BC V2T 8X8
Canada
longboardproducts.com

Every effort has been made to ensure that the information in these installation guidelines are accurate. Longboard is not responsible for printing or clerical errors.

For more information, contact client care at info@longboardproducts.com or call toll free 1-800-604-0343.

LONGBOARD®
INSPIRING ARCHITECTURE

INTERIOR
Order Information

Tongue & Groove Systems

V-Groove Planks

* 48 sq. ft. box quantities ‡ 96 sq. ft. box quantities

Size	12′ *	24′ ‡	12′ Perf *	24′ Perf ‡
2½″	3V.145	-	3VP.145	-
4″	4V.145	4V.289	-	-
6″	6V.145	6V.289	6VP.145	6VP.289

Smooth Planks

Size	12′ *	24′ ‡	12′ Perf *	24′ Perf ‡
6″	6PSP.145	6PSP.289	6PSPP.145	6PSPP.289

Channel Planks

Size	12′ *	24′ ‡	12′ Perf *	24′ Perf ‡
6″	6CH.145	6CH.289	-	-

Bevel Planks

Size	12′ *	24′ ‡	12′ Perf *	24′ Perf ‡
6 ″ Single	6SB.145	6SB.289	-	-
6 ″ Triple	6TB.145	6TB.289	-	-

Castellation Planks

Size	12′ *	24′ ‡	12′ Perf *	24′ Perf ‡
4″	4CA.145	4CA.289	-	-
8″	8CA.145	8CA.289	-	-

Acoustical Soundtex® Scrim

Size	12′ *	24′ ‡
6″ V-Groove Plank	6VPA.145	6VPA.289
6″ Smooth Plank	6PSPPA.145	6PSPPA.289

V-Groove Planks

Smooth Planks

Channel Planks

Perforated Planks

Bevel Planks

Castellation Planks

Butt Joint Fastening Kit

Quick Screen Clips

U-Shim

Touch-up Pens

Accessories

Product	Qty	SKU
Quick Screen Clips	1750, box	CLIP.N1750
Quick Screen Clips	100, bag	CLIP.N100
1/16" U-SHIM	250, bag	SHIM.1001
Butt- Joint Fastening Kit (6")	20 kits, bag	TGBJKIT
Touch Up Pens *Reach out to confirm color with account manager.*	N/A	TUP

Trim Components

Type	Style	Product	Dimensions	SKU
Starter	Precision	Starter J-Track	(5/8″) - 12′	1SJT.145
Starter	Traditional	Starter Strip	(1-7/8″) - 12′	2SS.145
Starter	Traditional	Back-to-Back Starter Strip	(1-1/4″)	2BTBSS.145
J-Track	Precision	Two Piece J-Track	(5/8″) - 12′	1X1JT.145
J-Track	Precision	J-Track	(5/8″) - 12′	1JT.145
J-Track	Craftsman	J-Track	(7/8″) - 12′	JT23.145
J-Track	Craftsman	Two Piece J-Track	(7/8″) - 12′	JT23S.145
J-Track	Traditional	Two Piece J-Track	(1-3/8″) - 12′	1X2JT.145
Corner	Precision	Outside Corner	(3/16″) - 12′	05OC.145
Corner	Craftsman	Inside Corner	(3/4″) - 12′	1IC.145
Corner	Craftsman	Outside Corner	(1″) - 12′	1OC.145
Corner	Traditional	Corner Set	(2″) - 12′	2CORS.145
Corner	Traditional	3" Smooth	(3") - 24'	3SCP.289
Corner	Traditional	3" V-Groove	(3") - 24'	3VCP.289
Reveal	Precision	Flat Reveal	(1/2″) - 12′	1FR.145
Reveal	Precision	T&G Flat Reveal	(1/2″) - 24′	1TGFR.289
Reveal	Craftsman	U-Reveal Set	(3/4″) - 12′	1URS.145
Reveal	Craftsman	T&G U-Reveal	(3/4) - 24′	1TGURK.289
Reveal	Traditional	U-Reveal Set	(1-1/2″) - 12′	2URS.145
Reveal	Traditional	Flat Reveal Set	(1-1/2″) - 12′	2FRS.145
Reveal	Traditional	T&G U-Reveal	(1 1/2″) - 24′	2TGURK.289
Reveal	Traditional	Offset Flat Reveal Set, J-Track Base	(2″) - 12′	2OFFJ.145
Reveal	Traditional	Offset Flat Reveal Set, Termination Base	(2″) - 12′	2OFFT.145
Termination	Precision	Termination Set	(5/8″) - 12′	1TS.145
Termination	Craftsman	Termination Set	(7/8″) - 12′	TS23S.145
Termination	Traditional	Termination Set	(1-3/8″) - 12′	2TS.145
Compression Joints	Traditional	Compression Joint	(1-3/8″) - 24′	2CJ.289

Precision Starter J-Track

Traditional Starter Strip

Traditional Back-to-Back Starter Strip

Precision Two-Piece J-Track

Precision J-Track

Craftsman J-Track

Craftsman Two Piece J-Track

Traditional Two Piece J-Track

Precision Outside Corner

Craftsman Inside Corner

Craftsman Outside Corner

Traditional Corner Set

3" Smooth Corner

3" V Groove Corner

Precision Flat Reveal

Precision T&G Flat Reveal

Craftsman U-Reveal Set

Craftsman T&G U-Reveal

Traditional U-Reveal Set

Traditional Flat Reveal Set

Traditional T&G U-Reveal

Traditional Offset Flat Reveal Set, J-Track Base

Traditional Offset Flat Reveal Set, Termination Base

Precision Termination Set

Craftsman Termination Set

Traditional Termination Set

Traditional Compression Joint

+1 800 604 0343
longboardproducts.com • info@longboardproducts.com

Link & Lock™ Battens

Size	12′	24′	End Caps (20/box)	End Mounts (20/box)
2″	2X2LL.145	2X2LL.289	2LLEC.2	2LLEM.2
4″	2X4LL.145	2X4LL.289	2LLEC.4	2LLEM.4
6″	2X6LL.145	2X6LL.289	2LLEC.6	2LLEM.6
8″	2X8LL.145	2X8LL.289	2LLEC.8	2LLEM.8
Link & Lock™ HD Battens				
4"	2X4LLHD.145	2X4LLHD.289	2LLHDEC.4	2LLHDEM.4
6"	2X6LLHD.145	2X6LLHD.289	2LLHDEC.6	2LLHDEM.6
8"	2X8LLHD.145	2X8LLHD.289	2LLHDEC.8	2LLHDEM.8
Link & Lock™ Box Battens				
4 x 4"	4X4LL.145	4X4LL.289	4LLEC.4	-
4 x 6"	4X6LL.145	4X6LL.289	4LLEC.6	-

Link & Lock™ Batten

Link & Lock™ HD Batten

Link & Lock ™ Box Battens

Mounting Accessories	Qty	SKU
Link & Lock Mounting Clip	48, bag	LLMC.N48
Link & Lock™ Isolation Washer	48, bag	LLIW.N48
Dewalt® 1/2″ Pilot Point Drill Bit	1	DRILLBT.05
24′ Link & Lock Internal Stiffener	1	LLSTIFF.289
3M® Double Sided Adhesive Tape - 108′	1, roll	LLTAPE.1296

Mounting Clip

Isolation Washer

Dewalt® Drill Bit

Internal Stiifener

Link & Lock™ Mounting Brackets

Product	Single	Dual
45° LEFT FIXED	LLMBK.45LF	LLDMBK.45LF
45° RIGHT FIXED	LLMBK.45RF	LLDMBK.45RF
90° CENTER FIXED	LLMBK.90F	LLDMBK.90F
45° LEFT SLIDING	LLMBK.45LS	LLDMBK.45LS
45° RIGHT SLIDING	LLMBK.45RS	LLDMBK.45RS
90° CENTER SLIDING	LLMBK.90S	LLDMBK.90S

Single / Dual

Fixed / Sliding

Link & Lock ™ Mounting Brackets

Privacy Beam System

Size	Product	24′	End Caps (20/box)
1x3″	Privacy Beam	1X3B.289	1BEC.3
1x5″	Privacy Beam	1X5B.289	1BEC.5
2x2″	Single Post	2X2SP.289	2X2PC.2
2x3″	Double Post	2X3DP.289	2X3PC.3

Mounting Accessories	Qty	SKU
Spacer Block	100, box	2X2SB.N100
1″ Spacer Bar Stock Length	1	1X2FB.145
1x3″ Spacer Bar	100, box	1X2FB.1
1x5″ Spacer Bar	100, box	1X2FB.3
3″ Mounting Bracket	100, box	3PSMB.1
#10 Black Screws	100, box	PECS.N100

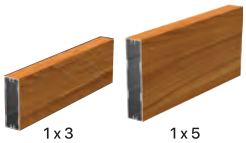

1 x 3

1 x 5

Privacy Beam

Spacer Bar

Mounting Bracket

Dauntless System

Dimensions	Product	12′	24′	End Caps (20/box)
1-5/8″ x 4″	Baffle	2X4CB.145	2X4CB.289	2BEC.4
1-5/8″ x 6″	Baffle	2X6B.145	2X6CB.289	2BEC.6

Hanger Bracket Mounting System

Product	Kind	Qty	SKU
Side Rail	24' Carrier Rail	1	2CBSR.289
Beam Spline Connection Top	Accessory	1	BSCT.6
2″ Hanger Bracket	Bracket	1	CBHB.2
4″ Hanger Bracket	Bracket	1	CBHB.4
6″ Hanger Bracket	Bracket	1	CBHB.6
8″ Hanger Bracket	Bracket	1	CBHB.8
10″ Hanger Bracket	Bracket	1	CBHB.10
12″ Hanger Bracket	Bracket	1	CBHB.12

Clip Mounting System

Product	Kind	Qty	SKU
Single Rail [Δ]	24′ Carrier Rail	1	CBR.289
Double Rail [Δ]	24′ Carrier Rail	1	CBDR.289
1-1/2″ Single Hanger Clip	Clip	20, box	HCS.2
3″ Hanger Clip	Clip	20, box	HC.3
Eye Bolt with T-Nuts	Attachment	20, box	CBEB.N20

[Δ] Includes 7 Eye-Bolts with T-Nuts

Clip Assembly

Hanger Bracket Assembly

We offer a vibrant spectrum of over 50 Colors.
Scan the QR Code to explore our Finishes at Longboard Architectural Products.

Woodgrain

Solid & Specialty

Speckle

Naturally Aged Metals

Achieve your Vision.

+1 800 604 0343
longboardproducts.com • info@longboardproducts.com

Finish Options

Achieve your vision.

Whether creating a space that offers the warmth and appearance of Woodgrains, or the modern industrialized look of Naturally Aged Metals, we have a finish option for you.

Require a custom finish or color? Our experienced color-matching team can make it a reality!

Contact us to confirm lead times for orders greater than 15k sq.ft in the Most Popular Finishes category.

Longboard Finish Classification

Type: Woodgrain / Solid / Metallic / Speckle / Naturally Aged Metal
Surface: Smooth / Textured
Sheen: Matte / Satin / Glossy
Performance: AAMA 2604 / AAMA 2605
Finish Warranty: 15 Year / 20 Year

Click / Scan the QR code to check our latest lead times and explore available options!

LONGBOARD®
INSPIRING ARCHITECTURE

Woodgrains

Longboard's woodgrain finishes have a slight texture with matte sheen.

Black Oak, Burnt Cherry, Italian Rosewood, Dark Olive, Light Olive, Dark Walnut, Dark National Walnut, Light National Walnut, Table Walnut, Dark Antique Oak, National Mahogany, Western Cedar, Dark Cherry, Dark Acacia, Dark Bamboo

Dark Knotty Pine, Light Bamboo, Dark Fir, Light Cherry, Light Oak, Light Fir, Southern Yellow Pine, Rock Elm, Birchwood, Blonde Oak, Beechwood, Grey Hemlock, Driftwood, Grey Douglas Fir, White Oak

Solid & Specialty

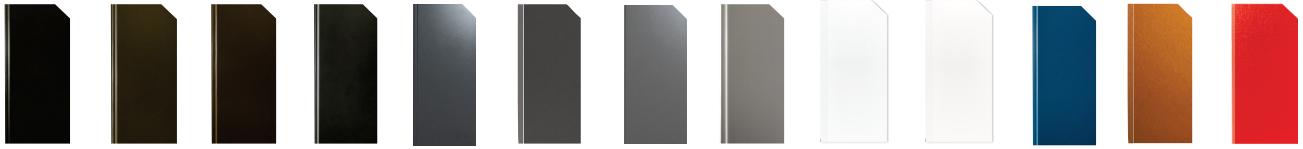

Onyx Black	Dark Brown	Classic Bronze	Moonstone	Imperial Slate	Slate Grey	Shale	Venus	Ultra White	Bone White	Medium Blue	Copper Penny	Chilli Pepper
Textured Matte	*Smooth Satin*	*Smooth Satin*	*Smooth Satin*	*Textured Matte*	*Smooth Satin*	*Textured Matte*	*Smooth Satin*	*Smooth Satin*	*Smooth Satin*	*Smooth Satin*	*Smooth Satin*	*Smooth Satin*
Solid	Solid	Solid	Metallic	Solid	Solid	Solid	Metallic	Solid	Solid	Solid	Metallic	Solid

Speckle

Brownstone	Baked Clay	Burnt Sienna	Biscotti	Relic Stone	Limestone	Bedrock	Pebble	Alabaster	Portland Stone
Textured Matte	*Textured Matte*	*Textured Matte*	*Textured Matte*	*Textured Matte*	*Textured Matte*	*Textured Matte*	*Textured Matte*	*Textured Matte*	*Textured Matte*
Speckle	Speckle	Speckle	Speckle	Speckle	Speckle	Speckle	Speckle	Speckle	Speckle

Naturally Aged Metals

Liberty	Brooklyn	Eiffel	Empire	Golden Gate
Textured Matte	*Smooth Glossy*	*Textured Matte*	*Textured Matte*	*Textured Matte*
Naturally Aged Metal	Naturally Aged Metal	Naturally Aged Metal	Naturally Aged Metal	Naturally Aged Metal

Print, Screens, and our pictures do not accurately reflect aspects of our finishes – textures, sheen, woodgrain hues, etc. Always order a physical sample before purchase! Our Color Bars swatches and samples will provide an accurate representation.

If a custom finish is required, we will work with our industry leading coating suppliers to develop a custom finish solution. All finishes are rigorously tested for corrosion and weathering resistance to ensure that it will stand up and deliver superior performance in the built environment.

We perform accelerated weathering testing in our onsite laboratory and work closely with coating suppliers to review weathering results of finishes undergoing natural Florida exposure testing. Our disciplined approach to powder coating, quality and process control distinguishes it as industry leading product manufacturer and ensures that its premium products stay looking beautiful for many, many years.

PINNACLE WARRANTY

NATIONAL WARRANTY
(Canada & USA only)

LONGBOARD®
INSPIRING ARCHITECTURE

15 Year Non-Prorated Powder Coating Finish - 50 Year Non-Prorated Extruded Aluminum Profiles [Limited Warranty]

Warranty granted to (building owner):

Longboard Architectural Products Inc. ("Longboard," "The Company") products as identified by the Product Codes listed will conform to the standards set out in Clause 1 and Clause 2 of this Warranty, subject to the terms and conditions set out in Clause 3 and 4 of this Warranty.

Product codes:	Product description:
Finish:	

Install contractor	
Project name	
Project address	
Address 2	Install start date
Date of substantial completion	

This Pinnacle Warranty is only valid for applications within Canada and USA. All applications outside of Canada and USA are required to contact Longboard for assistance.

Clause 1

Extruded Aluminum Profile(s) with Powder Coat Finish Longboard expressly warrants that its product line is free from manufacturing defects in material or workmanship.

1.1 When product is applied according to Longboard instructions and properly maintained, such product is guaranteed against the following:
1.2 Buckling: The product itself will be free of any buckling that is not associated with the substrate and/or structure to which the Longboard system is attached. For the purpose of this warranty, buckling shall be defined as warping of the product(s) exceeding one sixteenth of an inch out of plane per linear foot.
1.3 Corrosion: When installed in normal atmospheric conditions according to Longboard instructions and properly maintained, such product is further guaranteed against rusting and corroding. Subject to the limitations set out in Clause 3 and 4.
1.4 What we will do: If, during the fifteen (15) year Limited Warranty Period on the powder coating finish, the Product is defective in material or workmanship, Longboard will, in its sole discretion, either repair or replace the defective portion of the Product.
1.5 What we will do: If, during the fifty (50) year Limited Warranty Period on the extruded aluminum profiles, the Product is defective in material or workmanship, Longboard will, in its sole discretion, either repair or replace the defective portion of the Product.
1.6 After the 15th year, this Limited Warranty on the powder coated finish will expire and shall no longer be applicable.
1.7 After the 50th year, this Limited Warranty on the aluminum extruded profile(s) will expire and shall no longer be applicable.
1.8 Longboard replacement of the defective Product or reimbursement of this Limited Warranty is the exclusive remedy for the Covered Person for any defect in materials or workmanship. The Company will pay for all reasonable costs including material and labor as it relates to the repair and/or replacement of the defective Product.

Clause 2
Product Finish - AAMA 2604 Performance Specification

2.1 During the first fifteen (15) years of this warranty:
2.2 Checking/Cracking: No visible checking or cracking of the product finish on the building.
2.3 Chalking Resistance: No chalking of the product finish on the building in excess of that represented by No.8 rating based on ASTM D4214.
2.4 Color Retention: No color change of the product finish on the building greater than 5 (five) CIE Lab△E units calculated in accordance with ASTM 2244 Section 6.3. Color change shall be measured on the exposed paint surface which has been cleaned of oil, grease, chalk, oxidized film or other contaminants, corresponding values shall be measured on the control panel.
2.5 Gloss Retention: Coated surface will exhibit gloss retention of a minimum of 30% of the original. Gloss retention shall be measured on the exposed paint surface which has been cleaned of oil, grease, chalk, oxidized film or other contaminants, corresponding values shall be measured on the control panel.
2.6 Adhesion: Adhesion of product finish when initially applied to test panels and measured by reference to AAMA 2604-02 Clause 7.4.2 will show no removal of the film.

Clause 3

3.1 Warranty Terms and Conditions:
3.2 The "Warranty Period" for the warranties in Clause 1 shall mean the respective number of years or for as long as the Covered Person commencing on the date of substantial completion named above shall live and own the property on which the material was originally installed.
3.3 Registration of the product is required within ninety (90) days from substantial completion for the warranty to be in effect. This warranty is valid for the original owner and one other subsequent owner of the structure where the product(s) have been installed.
3.4 Normal atmospheric conditions exclude corrosive or aggressive atmospheres such as those contaminated with chemical fumes or other corrosive elements. The product finish is not meant for marine use on boats, ships or offshore platforms.
3.5 The product finish warranties as outlined in Clause 2 shall include coverage of the finish as it relates to the impact effects from hail and woodpecker birds.
3.6 Under no circumstance shall Longboard's liability under this limited warranty exceed 2.5 times the total corresponding Longboard material cost (excluding sales tax, labor and installation related costs) as noted on the original purchase invoice and paid by the Buyer for the specific project.

Clause 4

4.1 This warranty will not extend or cover:
4.2 Damages to the coated metal caused by handling, shipping, processing and/or installation; or
4.3 Damages to the coated metal caused by scratching or abrading after installation; or
4.4 Damages to the coated metal as a result of standing water in horizontal installations.
4.5 The warranty will not be applicable to damage or failure, which is caused by acts of God, falling objects, external forces, explosions, fire, riots, civil commotion's, acts of war, or other such similar or dissimilar occurrences beyond The Company's control.
4.6 Customer shall make available to The Company the dates of the installation of the coated metal, the maintenance records including details of washing and cleaning procedures in compliance with the cleaning requirements as stated in the Required Maintenance section of this warranty. Customers shall demonstrate that the failure of the coated metal was due to a breach of the warranty stated herein.
4.7 Claims must be made in writing to Longboard within 30 days of the discovery of a problem and authorization obtained prior to beginning any repair and/or refinishing work. The claimant must provide proof of coverage. Claims can be made by writing to Longboard at the Product Performance Department. After receiving such notice, The Company must be given a reasonable opportunity to inspect and verify the claim.
4.8 Longboard exclusive liability under this warranty, or other- wise, will be limited to refinishing and/or repairing, at The Company's sole discretion, the defective powder coated product. The warranty on any refinished, repaired or replaced coated metal supplied hereunder shall be for the remainder of the warranty period applicable to the originally coated metal. All warranty work will be performed by a company or contractor selected by Longboard. Color variance between refinished and/or repainted product and original shall not be indicative of a defect.
4.9 This warranty represents the entire agreement between parties in relation to its subject matter and supersedes any previous agreement whether written or oral between the parties in relation to its subject matter. The limited warranties state the entire liability of Longboard with respect to the products covered by them. The Company shall have no liability for any incidental or consequential damages. No person is authorized to make any representation or warranty on behalf of Longboard except as expressly set forth above, and any such statement shall not be binding on The Company. Except as expressly set forth above, Longboard makes no warranty of any kind, express or implied, including, without limitation, any implied warranty of merchantability or fitness for a particular purpose. Warranties shall be the duration of the limited warranty, or such shorter duration as provided under applicable local law. These limited warranties give you specific legal rights, and you may also have other rights which vary from area to area.
4.10 Nothing in this warranty shall be construed as a warranty of the workmanship of any installer or as imposing on Longboard any liability for unsatisfactory performance caused by faulty workmanship in installation.
4.11 It's agreed all parties involved that all claims and disputes relating to this agreement that cannot be settled through negotiation will try in good faith to first settle the dispute by mediation administered by the American Arbitration Association (Construction Industry Mediation Procedures) as a prelude to mandatory binding arbitration. Such binding arbitration is to be conducted and administered by the Construction Industry Arbitration Rules of the American Arbitration Association. Both seller and purchaser agree to share equally in the costs of both mediation and arbitration and that such binding arbitration will be the sole and final remedial action.
4.12 Required Maintenance. Depending on the Project Environment, follow the maintenance schedule as outlined in the Longboard Care & Maintenance Guide. Use a soft sponge or cloth, water and mild detergent, non-abrasive soap with the pH range of 5-9 to clean the powder coated area of dirt, grim and other debris. Pressure washing and the use of harsh detergents or chemicals is not recommended. Include in your maintenance records the following: date, time, specific products used, name of maintenance person and their designation, maintenance company name and general condition of the powder coated finish.

I have read and agree to the terms of the Longboard® Product 15 year powder coated surface and 50 year aluminum extruded profile(s) warranty and acknowledge receipt of a copy of the Warranty Certificate.

Name of owner or contractor: Date:

Signature:

Duly authorized on behalf of Longboard:

Name and designation: Date:

Signature:

PINNACLE WARRANTY

NATIONAL WARRANTY
(Canada & USA only)

LONGBOARD®
INSPIRING ARCHITECTURE

20 Year Non-Prorated Powder Coating Finish - 50 Year Non-Prorated Extruded Aluminum Profiles [Limited Warranty]

Warranty granted to (building owner):

Longboard Architectural Products Inc. ("Longboard," "The Company") products as identified by the Product Codes listed will conform to the standards set out in Clause 1 and Clause 2 of this Warranty, subject to the terms and conditions set out in Clause 3 and 4 of this Warranty.

Product codes:	Product description:
Finish:	

Install contractor	
Project name	
Project address	
Address 2	Install start date
Date of substantial completion	

This Pinnacle Warranty is only valid for applications within Canada and USA. All applications outside of Canada and USA are required to contact Longboard for assistance.

Clause 1

Extruded Aluminum Profile(s) with Powder Coat Finish Longboard expressly warrants that its product line is free from manufacturing defects in material or workmanship.

1.1 When product is applied according to Longboard instructions and properly maintained, such product is guaranteed against the following:
1.2 Buckling: The product itself will be free of any buckling that is not associated with the substrate and/or structure to which the Longboard system is attached. For the purpose of this warranty, buckling shall be defined as warping of the product(s) exceeding one sixteenth of an inch out of plane per linear foot.
1.3 Corrosion: When installed in normal atmospheric conditions according to Longboard instructions and properly maintained, such product is further guaranteed against rusting and corroding. Subject to the limitations set out in Clause 3 and 4.
1.4 What we will do: If, during the twenty (20) year Limited Warranty Period on the powder coating finish, the Product is defective in material or workmanship, Longboard will, in its sole discretion, either repair or replace the defective portion of the Product.
1.5 What we will do: If, during the fifty (50) year Limited Warranty Period on the extruded aluminum profiles, the Product is defective in material or workmanship, Longboard will, in its sole discretion, either repair or replace the defective portion of the Product.
1.6 After the 20th year, this Limited Warranty on the powder coated finish will expire and shall no longer be applicable.
1.7 After the 50th year, this Limited Warranty on the aluminum extruded profile(s) will expire and shall no longer be applicable.
1.8 Longboard replacement of the defective Product or reimbursement of this Limited Warranty is the exclusive remedy for the Covered Person for any defect in materials or workmanship. The Company will pay for all reasonable costs including material and labor as it relates to the repair and/or replacement of the defective Product.

Clause 2
Product Finish - AAMA 2605 Performance Specification

2.1 During the first twenty (20) years of this warranty:
2.2 Checking/Cracking: No visible checking or cracking of the product finish on the building.
2.3 Chalking Resistance: No chalking of the product finish on the building in excess of that represented by No.8 rating based on ASTM D4214.
2.4 Color Retention: No color change of the product finish on the building greater than 5 (five) CIE Lab △E units calculated in accordance with ASTM 2244 Section 6.3. Color change shall be measured on the exposed paint surface which has been cleaned of oil, grease, chalk, oxidized film or other contaminants, corresponding values shall be measured on the control panel.
2.5 Gloss Retention: Coated surface will exhibit gloss retention of a minimum of 50% of the original. Gloss retention shall be measured on the exposed paint surface which has been cleaned of oil, grease, chalk, oxidized film or other contaminants, corresponding values shall be measured on the control panel.
2.6 Adhesion: Adhesion of product finish when initially applied to test panels and measured by reference to AAMA 2605-02 Clause 7.4.2 will show no removal of the film.

Clause 3

3.1 Warranty Terms and Conditions:
3.2 The "Warranty Period" for the warranties in Clause 1 shall mean the respective number of years or for as long as the Covered Person commencing on the date of substantial completion named above shall live and own the property on which the material was originally installed.
3.3 Registration of the product is required within ninety (90) days from substantial completion for the warranty to be in effect. This warranty is valid for the original owner and one other subsequent owner of the structure where the product(s) have been installed.
3.4 Normal atmospheric conditions exclude corrosive or aggressive atmospheres such as those contaminated with chemical fumes or other corrosive elements. The product finish is not meant for marine use on boats, ships or offshore platforms.
3.5 The product finish warranties as outlined in Clause 2 shall include coverage of the finish as it relates to the impact effects from hail and woodpecker birds.
3.6 Under no circumstance shall Longboard's liability under this limited warranty exceed 2.5 times the total corresponding Longboard material cost (excluding sales tax, labor and installation related costs) as noted on the original purchase invoice and paid by the Buyer for the specific project.

Clause 4

4.1 This warranty will not extend or cover:
4.2 Damages to the coated metal caused by handling, shipping, processing and/or installation; or
4.3 Damages to the coated metal caused by scratching or abrading after installation; or
4.4 Damages to the coated metal as a result of standing water in horizontal installations.
4.5 The warranty will not be applicable to damage or failure, which is caused by acts of God, falling objects, external forces, explosions, fire, riots, civil commotion's, acts of war, or other such similar or dissimilar occurrences beyond The Company's control.
4.6 Customer shall make available to The Company the dates of the installation of the coated metal, the maintenance records including details of washing and cleaning procedures in compliance with the cleaning requirements as stated in the Required Maintenance section of this warranty. Customers shall demonstrate that the failure of the coated metal was due to a breach of the warranty stated herein.
4.7 Claims must be made in writing to Longboard within 30 days of the discovery of a problem and authorization obtained prior to beginning any repair and/or refinishing work. The claimant must provide proof of coverage. Claims can be made by writing to Longboard at the Product Performance Department. After receiving such notice, The Company must be given a reasonable opportunity to inspect and verify the claim.
4.8 Longboard exclusive liability under this warranty, or other- wise, will be limited to refinishing and/or repairing, at The Company's sole discretion, the defective powder coated product. The warranty on any refinished, repaired or replaced coated metal supplied hereunder shall be for the remainder of the warranty period applicable to the originally coated metal. All warranty work will be performed by a company or contractor selected by Longboard. Color variance between refinished and/or repainted product and original shall not be indicative of a defect.
4.9 This warranty represents the entire agreement between parties in relation to its subject matter and supersedes any previous agreement whether written or oral between the parties in relation to its subject matter. The limited warranties state the entire liability of Longboard with respect to the products covered by them. The Company shall have no liability for any incidental or consequential damages. No person is authorized to make any representation or warranty on behalf of Longboard except as expressly set forth above, and any such statement shall not be binding on The Company. Except as expressly set forth above, Longboard makes no warranty of any kind, express or implied, including, without limitation, any implied warranty of merchantability or fitness for a particular purpose. Warranties shall be the duration of the limited warranty, or such shorter duration as provided under applicable local law. These limited warranties give you specific legal rights, and you may also have other rights which vary from area to area.
4.10 Nothing in this warranty shall be construed as a warranty of the workmanship of any installer or as imposing on Longboard any liability for unsatisfactory performance caused by faulty workmanship in installation.
4.11 It's agreed all parties involved that all claims and disputes relating to this agreement that cannot be settled through negotiation will try in good faith to first settle the dispute by mediation administered by the American Arbitration Association (Construction Industry Mediation Procedures) as a prelude to mandatory binding arbitration. Such binding arbitration is to be conducted and administered by the Construction Industry Arbitration Rules of the American Arbitration Association. Both seller and purchaser agree to share equally in the costs of both mediation and arbitration and that such binding arbitration will be the sole and final remedial action.
4.12 Required Maintenance. Depending on the Project Environment, follow the maintenance schedule as outlined in the Longboard Care & Maintenance Guide. Use a soft sponge or cloth, water and mild detergent, non-abrasive soap with the pH range of 5-9 to clean the powder coated area of dirt, grim and other debris. Pressure washing and the use of harsh detergents or chemicals is not recommended. Include in your maintenance records the following: date, time, specific products used, name of maintenance person and their designation, maintenance company name and general condition of the powder coated finish.

I have read and agree to the terms of the Longboard® Product 20 year powder coated surface and 50 year aluminum extruded profile(s) warranty and acknowledge receipt of a copy of the Warranty Certificate.

Name of owner or contractor: Date:

Signature:

Duly authorized on behalf of Longboard:

Name and designation: Date:

Signature: